CITY OF SYLVANIA

STRUCTURE TYPE STUDY

SILICA DRIVE OVER TEN MILE CREEK

Submitted to:

City of Sylvania
6730 Monroe Street
Sylvania, OH 43560

STATE OF OHIO
NICHOLAS B. LAKE
E-75628
REGISTERED
PROFESSIONAL ENGINEER
6-21-19

Submitted by:

DGL CONSULTING ENGINEERS, LLC
3455 Briarfield Blvd. – Suite E
Maumee, OH 43537

JUNE 2019

TABLE OF CONTENTS

SECTION: **PAGE NO.:**

1.0 EXECUTIVE SUMMARY 1
- 1.1 PURPOSE 1
- 1.2 METHOD 2
- 1.3 CONCLUSION 2

2.0 INTRODUCTION 2
- 2.1 GENERAL DESCRIPTION AND OVERVIEW 2
- 2.2 BRIDGE AND ROADWAY ALIGNMENT 4
- 2.3 MAINTENANCE OF TRAFFIC 6
- 2.4 ROADWAY AND UTILITIES 6
- 2.5 LOADING CRITERIA 7

3.0 DESIGN CONSIDERATIONS 7

4.0 NARRATIVE OF BRIDGE DESIGN 8

5.0 PRELIMINARY FOUNDATION RECOMMENDATIONS 9

6.0 COST ESTIMATE 10

7.0 CONCLUSIONS AND RECOMMENDATIONS 11

8.0 FUNDING OPPORTUNITIES 12

9.0 APPENDICES 14
- A PRELIMINARY SITE PLAN & DETAILS
- B ESTIMATED CONSTRUCTION COST
- C ODOT STANDARD DRAWINGS
- D EXISTING STRUCTURE PLANS
- E PREVIOUS LOAD RATING REPORT (DGL, 2016)
- F PORTIONS OF FEMA FLOOD INSURANCE STUDY
- G 2018 BRIDGE INSPECTION REPORT

1.0 EXECUTIVE SUMMARY

1.1 Purpose

This report focuses on determining the best alternative for the replacement of the bridge that carries Silica Drive over Ten Mile Creek in Sylvania, OH, as well as funding opportunities for construction. The current bridge is a single span filled arch bridge built in 1938. It was rehabilitated in 1960 and needs replacement. Rehabilitation was investigated but ultimately determined to not be a realistic alternative, given the age and condition of structural members. Complete structure replacement alternatives, considering multiple structure types, were investigated for this report.

- Alternative #1 – Replace the existing bridge with a new structure consisting of single span prestressed concrete box beams with a composite reinforced concrete deck superstructure. The proposed substructures will be semi-integral wall type abutments on spread footings.

- Alternative #2 – Replace the existing bridge with a new structure consisting of single span prestressed concrete box beams with a composite reinforced concrete deck superstructure. The proposed substructures will be semi-integral abutments on drilled shafts and spill thru slopes.

- Alternative #3 – Replace the existing bridge with a new structure consisting of three span prestressed concrete box beams with a composite reinforced concrete deck superstructure. The proposed substructures will be concrete cap and column piers on drilled shafts with semi-integral abutments on drilled shafts on spill thru slopes.

- Alternative #4 – Replace the existing bridge with a new structure consisting of single span prestressed concrete I-beams with a composite reinforced concrete deck superstructure. The proposed substructures will be semi-integral wall type abutments on spread footings.

- Alternative #5 – Replace the existing bridge with a new structure consisting of single span prestressed concrete I-beams with a composite reinforced concrete deck superstructure. The proposed substructures will be semi-integral abutments on drilled shafts on spill thru slopes.

- Alternative #6 – Replace the existing bridge with a new structure consisting of single span steel beams with a composite reinforced concrete deck superstructure. The proposed substructures will be semi-integral wall type abutments on spread footings.

- Alternative #7 – Replace the existing bridge with a new structure consisting of single span steel beams with a composite reinforced concrete deck

superstructure. The proposed substructures will be semi-integral abutments on drilled shafts on spill thru slopes.

1.2 Method

DGL performed a site evaluation, along with a survey of the bridge. The structure types considered for evaluation are based upon the details and requirements of the current Ohio Department of Transportation (ODOT) Bridge Design Manual as well as the ODOT Standard Bridge Drawings. Preliminary design was performed to determine beam member size for all alternatives. The existing structure for this project will be removed and proposed foundation recommendations are part of this report.

1.3 Conclusion

Based on our site visit, existing site geometry, proposed project requirements and the following analysis, it was determined that Alternative #3 three span prestressed concrete box beams, was the most cost effective alternative and thus, the recommended alternative. The Municipal Bridge Program and OPWC grant will be the most likely funding sources to be pursued.

2.0 INTRODUCTION

2.1 General Description and Overview

Silica Drive is a north-south urban local roadway, about 0.7 miles long, beginning at Convent Boulevard in The City of Sylvania and ending at Monroe Street. Northview High School is located Southwest of the structure carrying Silica Drive over Ten Mile Creek (Picture 1).

The bridge carrying Silica Drive over Ten Mile Creek was constructed in 1938. It is a 73 foot long single span closed spandrel filled arch bridge. In 1967, a major rehabilitation was performed. The 1967 existing plans call for concrete deck rehabilitation as well as concrete patching repairs to portions of the structure. In 1980, existing plans show 2" of asphalt resurfacing over the existing deck. Since then, the wearing surface over the bridge has been removed, as the current wearing surface is concrete in nature. In 2015 concrete patching was performed along the existing curb.

Picture 1: Silica Drive Existing Bridge Elevation (Looking west)

DGL Consulting Engineers, LLC performed a load rating report in 2010 and updated it in 2016 to include specialized hauling vehicles. It is included as Appendix E. Load limit restrictions were required at the time and signs were installed.

The bridge has experienced major deterioration throughout the years. The concrete curbs deteriorated to the point that they were patched but now the patches are failing too. The majority of the underside of the concrete arch has a damp, saturated stain appearance as well as longitudinal and map hairline cracking (Picture 2). There are multiple areas of concrete spalling and delamination. There are exposed reinforcing steel bars in these regions, with section loss in the main load carrying direction. There has been deterioration around a few of the scuppers, however, based on recent years field inspections, the concrete is failing at an advanced rate. The faces of the spandrel walls are in similar/worse condition. The cracks are larger, with concrete loss in multiple areas. Overall, the structure is in poor condition and the bridge components will be closely monitored in the upcoming inspection to see if any further deterioration has occurred.

Picture 2: West edge of Underside (Looking northwest)

Rehabilitation of the existing closed spandrel filled arch bridge was investigated. The entire structure would need to be inspected at arms length level to determine rehabilitation items and quantities. Based on the age of the structure and extent of deterioration, as well as the structure type itself, rehabilitation would prove to be a costly and timely undertaking. The extent of original concrete deterioration is unknown and will not be known until removing of the unsound concrete started taking place. This would lead to a large contingency and unexpected costs and delays during construction. Finally, at the end of construction, the original 1938 structure would remain with at least 2 major rehabilitations have taken place. The structure is also posted for load restrictions and this will not change with rehabilitation. The future design life will be short and is not the most appropriate solution. It is for these reasons that rehabilitation was eliminated as the appropriate feasible alternative.

2.2 Bridge and Roadway Alignment

The intersection of Monroe Street and Silica Drive is located approximately 400 feet north of the forward abutment of the subject bridge. To the south, Northview High School's main entrance is approximately 410 feet from the rear abutment of the subject bridge. The pavement of Silica Drive in this area is in poor condition and should be addressed. Currently, there is a separate project to address and remedy the asphalt roadway north of the bridge and extending thru the intersection of Monroe Street and Silica Drive. Regardless of alternative selection, the existing profile shall be maintained, to limit unnecessary approach work.

The span configurations for Alternatives #1 thru #7 vary and are shown in the Narrative of Bridge Design portion. A skew of 23 degrees is anticipated for each alternative and was determined based on field survey data collected and overall site geometry. Currently, the bridge has 29'-6" face-to-face of curb of Silica Drive. Overall, the bridge is 33'-8" out-to-out concrete parapets. See Appendix D for the existing plans.

Picture 3: Adjacent Pedestrian Bridge

To the west of the vehicular bridge, there lies a three span pedestrian bridge made of prestressed concrete box beams. This bridge has experienced severe deterioration, with reduction in structural capacity to the beams themselves, as well as concrete deterioration to the piers (Picture 3). **This is a big safety concern, for the bridge serves as a main walkway for Northview's high school students.** In 2018, The City of Sylvania hired DGL Consulting Engineers to perform an inspection and recommendations report on the pedestrian bridge and perform future alternative study and provide recommendations. From this report, it was concluded that incorporation of the pedestrian facilities on the vehicular bridge is the best decision economically and for future maintenance. The reduction of two deficient bridges that need to be repaired/reconstructed, versus only one bridge to maintain for the future is the most logical plan of action. DGL recommends inspecting this pedestrian bridge on a bi-annual basis, to appropriately monitor its condition and overall safety.

The proposed vehicular bridge will have a 10'-0" sidewalk along the west side, to accommodate the high volume of foot traffic and to increase the overall safety of the walking students. By using the ODOT standard of 2" concrete deck overhang beyond the railing and the toe-to-toe distance of curbs of 30'-0", then the total out-to-out

bridge deck will be 42'-8". Due to the proximity of the R/W on the west side, turnback wingwalls were used for all the structure alternatives. A preliminary transverse section of the superstructure, for the preferred alternative can be seen in Appendix A.

2.3 Maintenance of Traffic

The proposed bridge will be constructed using full closure construction during the summer, to avoid potential school conflicts. Construction is preliminary anticipated to take 3 to 4 months. If the school year is to be affected, it is preferable to interfere with the end of the school year as opposed to the beginning of the next, for bus schedules/learning new routes. This will be further evaluated during the design phase. A detour plan will be coordinated with The City and implemented in the final set of construction plans.

2.4 Roadway and Utilities

The proposed roadway across the bridge will have two (2) 12'-0" wide lanes. The proposed structure will have a 10'-0" wide sidewalk along the west side with a 1'-0" wide sidewalk railing. The east side will have a 42" tall concrete parapet based on ODOT standard drawings. The proposed face-to-face of railing dimension will be 40'-0". The proposed toe-to-toe of curb dimension will be 30'-0". This closely matches the existing roadway and pedestrian walking path.

Picture 4: Silica Drive (North Approach, Looking South)

There are utilities located near the bridge that will need to be addressed. OUPS was contacted and marked prior to the topographic survey performed by DGL. There are

overhead power lines on the west side of Silica Drive, with poles that may need to be relocated. There is a fiber optic line in the Southeast quadrant that will most likely need to be relocated. Columbia Gas provided a sketch that shows a gas line along the west side of the pedestrian bridge, although no flags were observed during the survey. All utilities and their appropriate disposition will be investigated further during the design phase.

2.5 Loading Criteria

Live Loads:

The design load for the proposed superstructure will be HL-93.
The design load used for the existing structure load rating is HS20-33.
The pedestrian load for the sidewalk is 60 lbs./ft^2.

Dead Loads:

Normal weight reinforced concrete	150 lbs./ft^3
Future wearing surface	60 lbs./ft^2

3.0 DESIGN CONSIDERATIONS

For the preferred alternative, the overall design is based on replacing the existing two lane bridge with a newer structure that best fits the project criteria. The traffic data does not warrant additional thru lanes. The incorporation of the pedestrian traffic onto the proposed bridge will be a huge benefit to The City moving forward. The spans selected were based on the overall site geometry, which was based on a field survey performed by DGL Consulting Engineers in April, 2019.

Silica Drive Traffic Data:

- Most Recent ADT (2013) 2,617
- Design ADT (2043) 3,402
- Design Hourly Volume 340
- T24 0.01
- Design Speed 30 mph
- Legal speed 25 mph
- Design Function Classification Urban Local

A hydraulic study was not performed; however, hydraulics were investigated. This bridge is in a FEMA Zone AE, meaning known flood elevations have been determined. The *Flood Insurance Study: Lucas County, Ohio and Incorporated Areas* which was updated on August 16th, 2011, to reflect the most current information and methodology, was researched (See Appendix F). The low chord of the existing bridge

is approximated to be at an elevation of 637.5+/-. This is an arch bridge, so the low chord can be based on interpretation. Survey data roughly confirms this elevation. With the absence of a Hydraulic Study at this time, the hydraulic opening was used for purposes of sizing the structure alternatives. All of the proposed alternatives increase the hydraulic opening by 5 to 40%, depending on the substructure spacing and type. A Hydraulic Study will need to be performed prior to the design phase, to confirm proper waterway adequacy and to finalize span lengths.

4.0 NARRATIVE OF BRIDGE DESIGN

Various structure types were considered and some were determined to be not feasible. Steel girders were considered but are more expensive than rolled beams of similar spans.

Piers were considered for all alternatives, however, they do not make the most sense, economically, for all of the alternatives, except prestressed concrete box beams. Prestressed box beams can be designed and vary in depth to accommodate all span lengths but are efficient anywhere from 20' to 105' +/-, whereas AASHTO I-Beams and steel beams/girders are typically more efficient at longer spans. This means that by increasing the quantity of beams, even though they become smaller and less expensive, it only slightly increases the overall cost when offset by the additional cost of piers. However, for the I-beam and steel structures, the cost drastically increases when piers are added since the reduction in beam costs do not vary by much.

For Alternatives #6 and #7, weathering steel could be pursued, due to the cost savings in initial paint and potential for no future maintenance coatings. Constant monitoring (5 year interval recommended) to determine if section loss is an issue if recommended. This will determine if a portion of total structure maintenance re-coating is recommended. For the preliminary cost estimate, initial construction costs only were considered. The steel beam alternatives have the potential to have the additional cost for life cycle maintenance costs associated with them.

The profile grade of Silica Drive may need to be raised, in order to maintain a similar hydraulic opening/hydraulic conveyance to Ten Mile Creek. It is assumed that no adjustments will be necessary for Alternatives #1, #3, #6 and #7, whereas Alternatives #2, #4 and #5 would require Silica Drive be raised 5", 4" and 7", respectively.

The bridge was recently named the "Don Townsend Gateway Bridge" to honor a local resident. As a result, the proposed replacement bridge has been requested to have some additional aesthetics appeal. Some conceptual ideas are: form liners for abutment/parapet walls, stained walls, planter baskets with drip irrigation, brick pilasters with decorative lighting including hanging baskets (similar to Main Street over Ten Mile Creek; next structure downstream); etc. Rough aesthetic costs have been

included within the cost of railing/parapet concrete; a more detailed design can be performed during the design phase.

Careful consideration to all structure types, the following alternatives presented themselves as the best structure replacement types:

Structure Alternative #1 – Prestressed Concrete Box Beams on Wall Type Abutments

This alternative consists of prestressed concrete box beams (33 inch deep) with a reinforced concrete deck. Center-to-center substructures will be approximately 75'. The transverse section will use 9-CB33-48 (48" wide) beams and 2-CB33-36 (36" wide) beams and a deck overhang of 4" on each side. The deck for this alternative will be 6" thick. The substructure units will be semi-integral wall type abutments on spread footings, resting directly on bedrock.

Structure Alternative #2 – Prestressed Concrete Box Beams on Spill-Thru Slopes

This alternative consists of prestressed concrete box beams (42 inch deep) with a reinforced concrete deck. Center-to-center substructures will be approximately 100'. The transverse section will use 9-CB42-48 (48" wide) beams and 2-CB42-36 (36" beams) and a deck overhang of 4" on each side. The deck for this alternative will be 6" thick. The substructure units will be semi-integral stub abutments on drilled shafts (spill-thru abutment slopes). This alternative requires the profile grade be raised approximately 5" in order to maintain a similar hydraulic opening to Ten Mile Creek. The results of the Hydraulic Study will determine actual adjustments that would be required to Silica Drive vertically.

Structure Alternative #3 – Prestressed Concrete Box Beams on Cap and Column Piers and Spill-Thru Slopes - *(Recommended Alternative)*

This alternative consists of a three span prestressed concrete box beams (17 inch deep) with a reinforced concrete deck. Center-to-center substructures will be approximately 34'. The transverse section will use 9-CB17-48 (48" wide) beams and 2-CB17-36 (36" wide) beams and a deck overhang of 4" on each side. The deck for this alternative will be 6" thick. The substructure units will be cap and column concrete piers on drilled shafts and semi-integral stub abutments on drilled shafts (spill-thru abutment slopes).

Structure Alternative #4 – Prestressed Concrete AASHTO I-Beams on Wall Type Abutments

This alternative consists of prestressed concrete AASHTO I-beams (36 inch deep) with a reinforced concrete deck. Center-to-center substructures will be approximately

75'. The transverse section will use 6-WF36-49 beams spaced at 7'-2" and a deck overhang of 3'-6" on each side. The deck for this alternative will be 8.5" thick. The substructure units will be semi-integral wall type abutments on spread footings, resting directly on bedrock. This alternative requires the profile grade be raised approximately 4" in order to maintain a similar hydraulic opening to Ten Mile Creek. The results of the Hydraulic Study will determine actual adjustments that would be required to Silica Drive vertically.

Structure Alternative #5 – Prestressed Concrete AASHTO I-Beams on Spill-Thru Slopes

This alternative consists of prestressed concrete AASHTO I-beams (48 inch deep) with a reinforced concrete deck. Center-to-center substructures will be approximately 100'. The transverse section will use 6-WF48-49 beams spaced at 7'-3" and a deck overhang of 3'-6" on each side. The deck for this alternative will be 8.5" thick. The substructure units will be semi-integral stub abutments on drilled shafts (spill-thru abutment slopes). This alternative requires the profile grade be raised approximately 7" in order to maintain a similar hydraulic opening to Ten Mile Creek. The results of the Hydraulic Study will determine actual adjustments that would be required to Silica Drive vertically.

Structure Alternative #6 – Steel Beams on Wall Type Abutments

This alternative consists of W36x256 steel rolled beams with a composite reinforced concrete deck. Center-to-center substructures will be approximately 75'. The transverse section will use beam spacing of 7'-3" c/c and a deck overhang of 3'-6". The deck for this alternative will be 8.5" thick. The substructure units will be semi-integral wall type abutments on spread footings, resting directly on bedrock.

Structure Alternative #7 – Steel Beams on Spill-Thru Slopes

This alternative consists of W40x397 steel rolled beams with a composite reinforced concrete deck. Center-to-center substructures will be approximately 100'. The transverse section will use beam spacing of 7'-3" c/c and a deck overhang of 3'-6". The deck for this alternative will be 8.5" thick. The substructure units will be semi-integral stub abutments on drilled shafts (spill-thru abutment slopes).

5.0 PRELIMINARY FOUNDATION RECOMMENDATIONS

With coordination with TTL Associates, it was determined that bedrock is anticipated to be sound and strong with a typical bearing capacity of 40,000 pounds per square foot. This means that the substructure units for Alternatives #1, #4 and #6 will be supported on spread footings directly on bedrock. Due to the location of bedrock, the abutments for Alternatives #2, #3, #5 and #7 will most likely be supported on drilled

shafts that are firmly socketed in bedrock. During the design phase, it will be investigated to see what portions of the existing structure will need to be removed versus portions of structure removed, allowing some reduction in demolition costs. Further geotechnical investigation and recommendations will be performed during the design phase.

6.0 COST ESTIMATE

The estimated bridge only (*) construction costs based on ODOT's 2018 contract awarded costs are:

Alternative #1 - $840,000
Alternative #2 - $850,000
Alternative #3 - $821,000 **(Recommended Alternative)**
Alternative #4 - $835,000
Alternative #5 - $837,000
Alternative #6 - $916,000
Alternative #7 - $1,077,000

(*) – The costs shown for Alternatives #2, #4 and #5 take into account the change to the profile grade to Silica Drive. These costs are in addition to the minimum required approach roadway work along Silica Drive, not presented within these estimated bridge construction costs.

These costs include a 15% incidentals factor. For more information see the detailed calculation spreadsheet in Appendix B. Note that these costs are for the construction of the bridge. Other project costs that are not included in this figure are: removal of existing bridge only (see next paragraph), approach roadway work, right-of-way acquisition, environmental, engineering design fees, construction engineering (i.e. testing/inspection) and inflation due to construction year (based on ODOT's Business Plan Inflation Calculator). These costs will add to the overall project cost and should be considered for estimating purposes and acquiring funds (Section 8.0). **The total preliminary project cost estimate is $1,540,000, which are shown in Appendix B.**

There are removal costs that differ between the alternatives. The alternatives with spill thru slopes at the abutments could have a lower removal costs, as portions of the existing abutments can be left 1' below final grade. For the wall type abutment alternatives, more removal is required. Additional removal costs of $30,000 have been added to Alternatives #1, #4 and #6 to reflect this. For funding purposes, a preliminary estimate of $100,000 was calculated for the base alternative removal costs.

Future maintenance costs were considered in the evaluation as well. All alternatives should have deck replacements after 50 years, based on condition of concrete decks (all should behave the same over time). Alternatives #1 thru #5 will be similar in the sense that there should be minimal maintenance costs associated with prestressed concrete beams. Future maintenance costs associated with Alternatives #6 and #7 are mostly based on the condition of the protective coating system and if/when partial/total maintenance coatings are to be performed. A monitoring program would aid in determining condition assessment and maintenance required. Since there were multiple alternatives that are already more economical with little to no future costs associated with them, life cycle costs for Alternatives #6 and #7 were not needed.

7.0 CONCLUSIONS AND RECOMMENDATIONS

After considering all the above results, we recommend that the proposed bridge be Alternative #3, a three span prestressed concrete box beam (17" deep) superstructure supported on cap and column concrete piers and semi-integral spill thru slope abutments. This alternative is the most cost effective solution when compared to all of the other alternatives. Also, this alternative provides a shallower superstructure depth, better overall waterway adequacy with the spill thru slopes and will raise the low chord.

Picture 5: Bonniebrook Road over Ten Mile Creek

The City of Sylvania has direct experience and knowledge of this prestressed concrete box beam bridges and how they should perform: the next two structures upstream along Ten Mile Creek are a single span prestressed concrete box beam (Olde Post Road) and a three span prestressed concrete box beam structure (Bonniebrook Road), both spanning the same Ten Mile Creek. Olde Post Road (Picture 5) was rehabilitated

in 2009 and is currently rated as a 8 (Very Good condition). Bonniebrook Road (Picture 6) is the next upstream street from Olde Post Road and was constructed in 2006 and is currently rated as an 8 (Very Good condition). The recommended Alternative #3 would be very similar to the Bonniebrook structure.

Picture 6: Olde Post Road over Ten Mile Creek

8.0 FUNDING OPPORTUNITIES

In an attempt to help The City of Sylvania with construction costs, sources of funding were researched. There are multiple avenues for funding, such as grants and ODOT based programs that offer money for different reasons/purposes. Multiple phone conversations have taken place between DGL and ODOT, to discuss appropriate funding sources. Programs such as Historic Bridge were investigated but ultimately were not recommended as the most likely source of funding. The Historic Bridge Program does not apply, since the bridge was not eligible. Also, the money associated are intended to be used more for the rehabilitation rather than replacement. The two programs that offer the best chance at funding are The ODOT Municipal Bridge Program and Ohio Public Works Commission (OPWC).

The Municipal Bridge Program is an ODOT based program and focuses on money tied to bridge rehabilitation/replacement. ODOT will provide 80% of construction costs relating to the project. However, at the current time, there is an additional 15% Toll Revenue Credit (TRC), increasing the total to 95% construction costs. At this time, the additional TRC is scheduled thru the 2024 construction and beyond that is unknown if it will continue. For the 2019 application (due August 15th, 2019), the maximum limit per project is $2.0M. The success rate is high, as 21 of 26 applications were awarded money (2017). The Municipal Bridge Program is a great funding source for this project and should be pursued. The application has recently changed and is

now due on August 15th and applicants are notified by no later than the first of December.

This bridge is listed on ODOT's 2019 target bridge list posted June 2019 (see Figure 1). The City can choose to pursue either 2022 construction (approximately $2.0M - $2.5M available) or 2023 (approximately $10M available), based on the availability of dollars and preference. However, it is the plan of the City to coordinate this bridge replacement project with the proposed construction at the intersection of Monroe Street and Silica Drive. If that intersection improvement project can be moved to 2022 construction, then The City may be interested in pursuing 2022 monies.

2019 Target Municipal Bridge List

District	County	City	Structure File Number	Facility Carried by Structure	NBIS Length Y/N	Maintenance Responsibility	General Appraisal	Sufficiency Rating	SD/FO	Deck Area	ADT	Last Inspection Date
2	HEN	HEN: HEN-M-53550-NAPOLEON	3560015	RYE ST. (CLOSED)	Y	4	2	19	1	312	10	7/10/2018
2	HEN	HEN: HEN-M-21812-DESHLER	3560368	SOUTH PINE STREET	Y	4	4	67	1	891	100	10/11/2018
2	LUC	LUC: LUC-M-77000-TOLEDO	4860357	SECOR ROAD	Y	4	5	65	2	6,006	17,873	9/14/2018
2	LUC	LUC: LUC-M-76022-SYLVANIA	4862473	SILICA DRIVE	Y	4	4	34.9	1	2,580	4,400	11/28/2018
2	LUC	LUC: LUC-M-59010-OTTAWA HILLS	4863976	RIVA RIDGE ROAD	Y	4	5	46.4	2	1,278	540	1/23/2019
2	SEN	SEN: SEN-M-76778-TIFFIN	7460066	ELLA ST.	Y	4	4	35.2	1	12,512	3,849	10/4/2018
2	SEN	SEN: SEN-M-76778-TIFFIN	7460201	ELLA ST.	Y	4	4	15.5	1	2,056	3,849	10/23/2018

Figure 1: 2019 Target Municipal Bridge List

The OPWC has a funding application that provides money for municipalities. The deadlines are typically at the end of October. The OPWC can be applied for in conjunction with the Municipal Bridge program. The OPWC forms can be completed and funds can be requested in the form of a grant or loan, with a grant being preferred. Various percentages of the remaining budget not covered by Municipal Bridge can be applied for, up to and including 100%.

9.0 APPENDICES

A. Preliminary Site Plan & Details

B. Estimated Construction Cost

C. ODOT Standard Drawings

D. Existing Structure Plans

E. Previous Load Rating Report (DGL, 2016)

F. Portions of FEMA Flood Insurance Study

G. 2018 Bridge Inspection Report

Appendix A:
Preliminary Site Plan & Details

℄ R/W & SURVEY CURVE DATA
Δ = 5°00' L.
D= 2°00'00"
R= 2,864.79'
L = 250.00'
E = 2.72'
T = 125.07'
CH = N 22°01'51" E, 249.92'

℄ R/W & SURVEY CURVE DATA
Δ = 12°08' L.
D= 3°40'00"
R= 1,562.61'
L = 330.91'
E = 8.80'
T = 166.07'
CH = N 13°27'51" E, 330.29'

0 20 40
SCALE: 1" = 20'

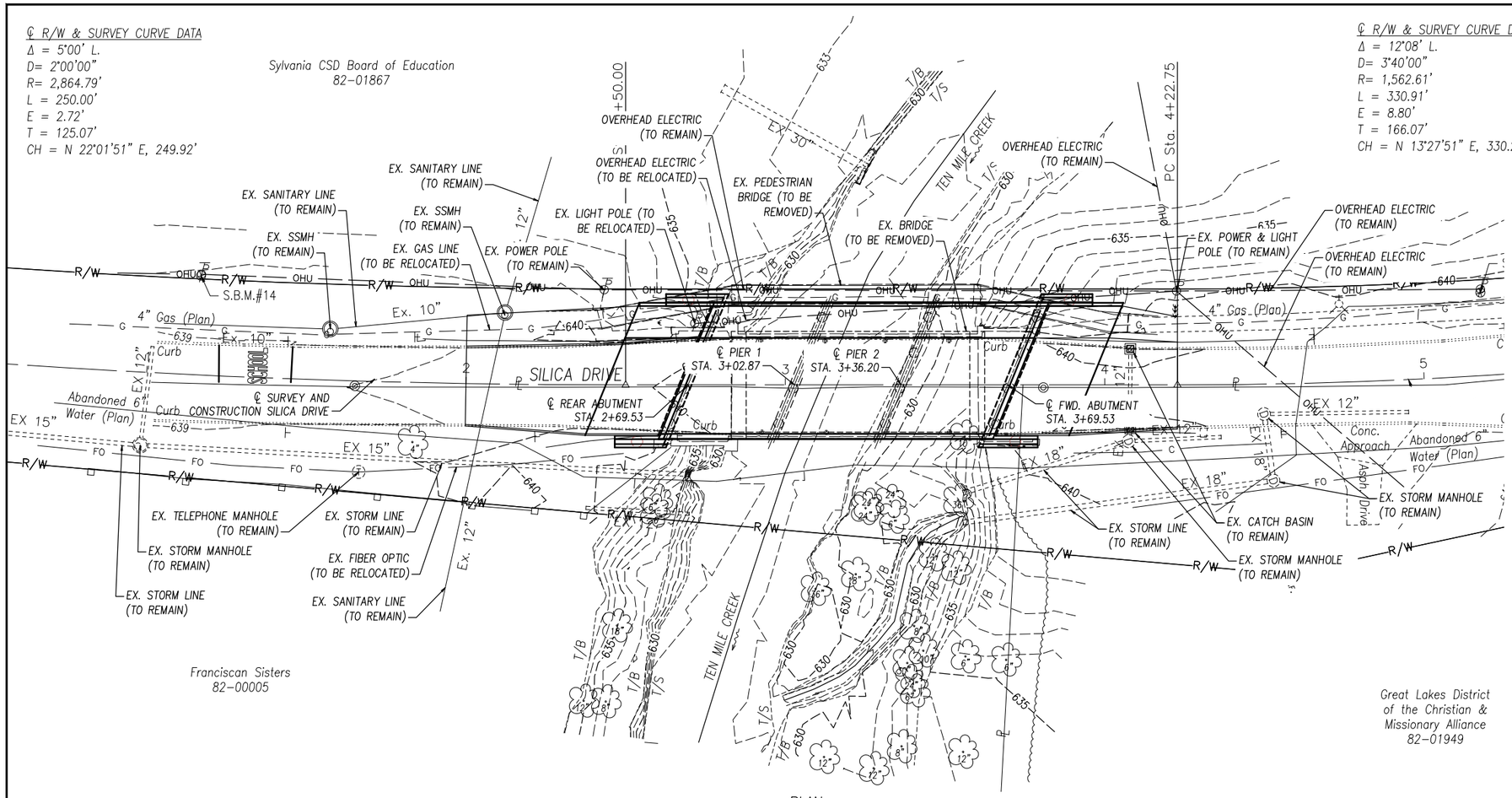

PLAN

NOT FOR CONSTRUCTION
JUNE 21, 2019

BENCHMARK INFORMATION

S.B.M.#13
MAG NAIL EAST SIDE OF POWER POLE.
ELEVATION=641.81

S.B.M.#14
MAG NAIL EAST SIDE OF POWER POLE.
ELEVATION=640.02

HYDRAULIC DATA

TO BE PERFORMED DURING THE DESIGN PHASE

EXISTING UNDERCLEARANCE EL. = 627.68±
PROPOSED UNDERCLEARANCE EL. = 628.06

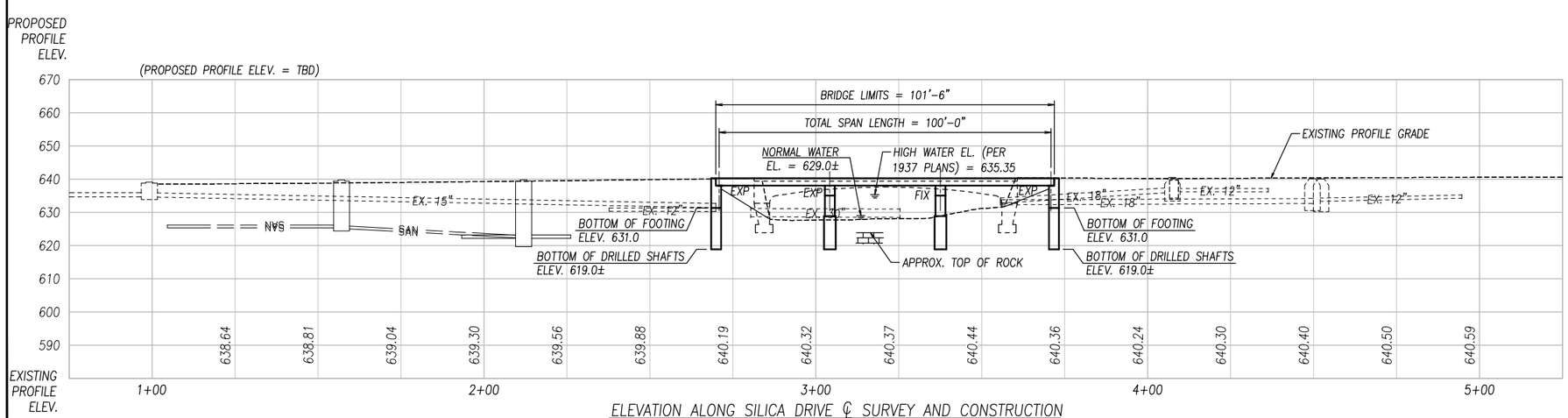

ELEVATION ALONG SILICA DRIVE ℄ SURVEY AND CONSTRUCTION

EXISTING BRIDGE DATA
(TO BE REMOVED)

TYPE: SINGLE SPAN REINFORCED CONCRETE ARCH
SPANS: 70'-0"± CLEAR SPAN
ROADWAY: 29'-6"± TOE/TOE CURB
LOADING: HS-20-33
SKEW: NONE
WEARING SURFACE: CONCRETE
APPROACH SLABS: NONE
ALIGNMENT: TANGENT
YEAR BUILT: 1938
CONDITION : POOR (POSTED)
STRUCTURE FILE NO.: 4862473

PROPOSED BRIDGE DATA

TYPE: THREE SPAN PRESTRESSED COMPOSITE CONCRETE BOX BEAM SUPERSTRUCTURE WITH REINFORCED CONCRETE DECK ON CAP AND COLUMN PIERS ON SEMI-INTEGRAL CONCRETE ABUTMENTS
SPANS: 33'-4", 33'-4", 33'-4" C/C SUBSTRUCTURES
ROADWAY: 30'-0" TOE/TOE CURB
LOADING: HL-93
SKEW: 23°00'00" LEFT FORWARD
WEARING SURFACE: MONOLITHIC CONCRETE
APPROACH SLABS: 25' LONG (AS-1-15)
ALIGNMENT: TANGENT
CROWN: 0.016
BRIDGE COORDINATES: 41°-42'-50.98" LAT., 83°-42'-28.76" LONG.
DECK AREA: 4335 SQ. FT.

DESIGN AGENCY
DGL Consulting Engineers, LLC
3455 Briarfield Blvd.-Suite E Maumee, OH 43537
(419) 535-1015

DESIGNED	DRAWN	REVIEWED	DATE
NBL	KEY	AEH	6-21-19
CHECKED	REVISED	STRUCTURE FILE NUMBER	
NBL		XXXXXXX	

SITE PLAN
SILICA DRIVE OVER TEN MILE CREEK

CITY OF SYLVANIA
SILICA DRIVE

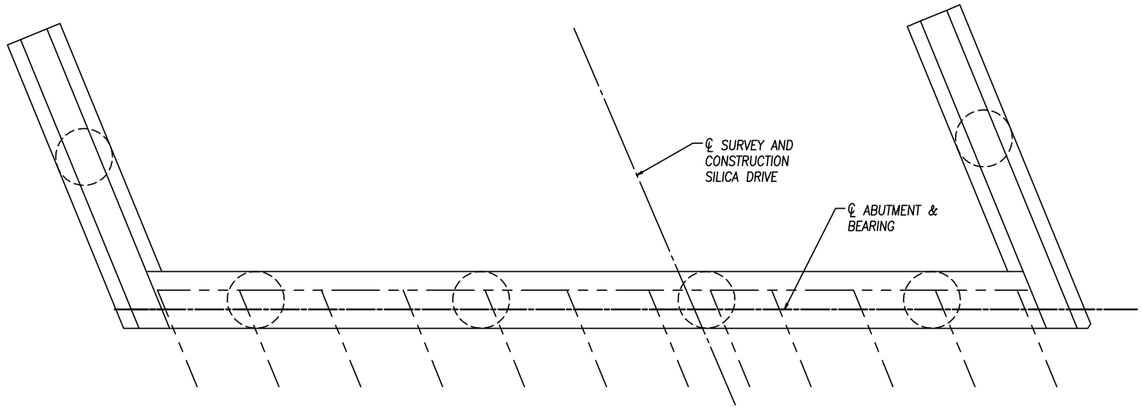

PRELIMINARY ABUTMENT PLAN

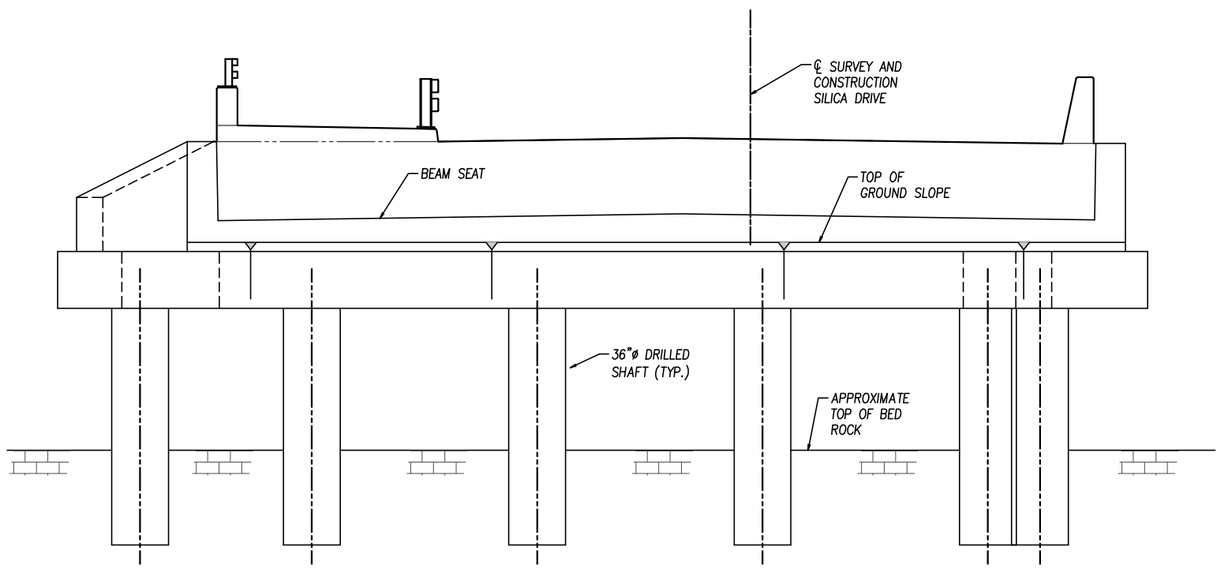

PRELIMINARY ABUTMENT ELEVATION

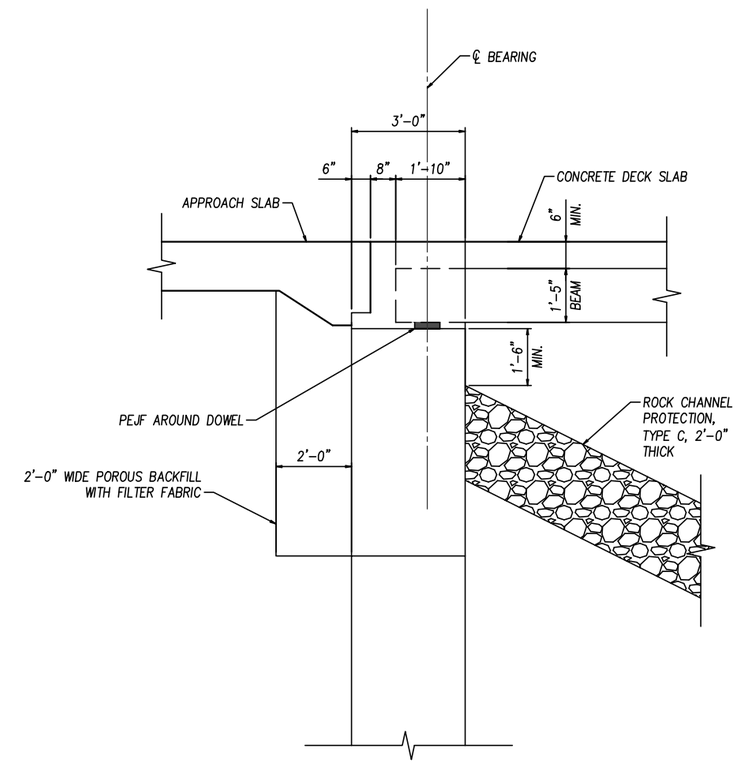

PRELIMINARY ABUTMENT SECTION

NOT FOR CONSTRUCTION
JUNE 21, 2019

DESIGN AGENCY
DGL Consulting Engineers, LLC
3455 Briarfield Blvd.-Suite E Maumee, OH 43537
(419) 535-1015

DESIGNED	DRAWN	REVIEWED	DATE
NBL	NBL	AEH	6-21-2019
CHECKED	REVISED	STRUCTURE FILE NUMBER	
AEH		XXXXXXX	

PRELIMINARY ABUTMENT DETAILS
SILICA DRIVE STRUCTURE TYPE STUDY
SILICA DRIVE OVER TEN MILE CREEK

CITY OF SYLVANIA
SILICA DRIVE

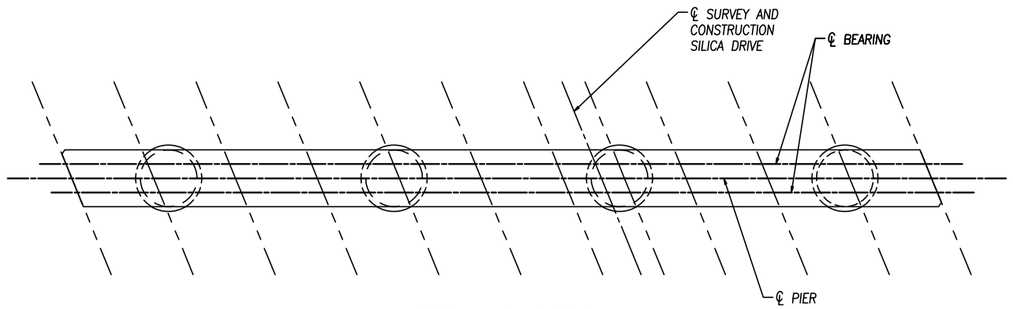

PRELIMINARY PIER PLAN

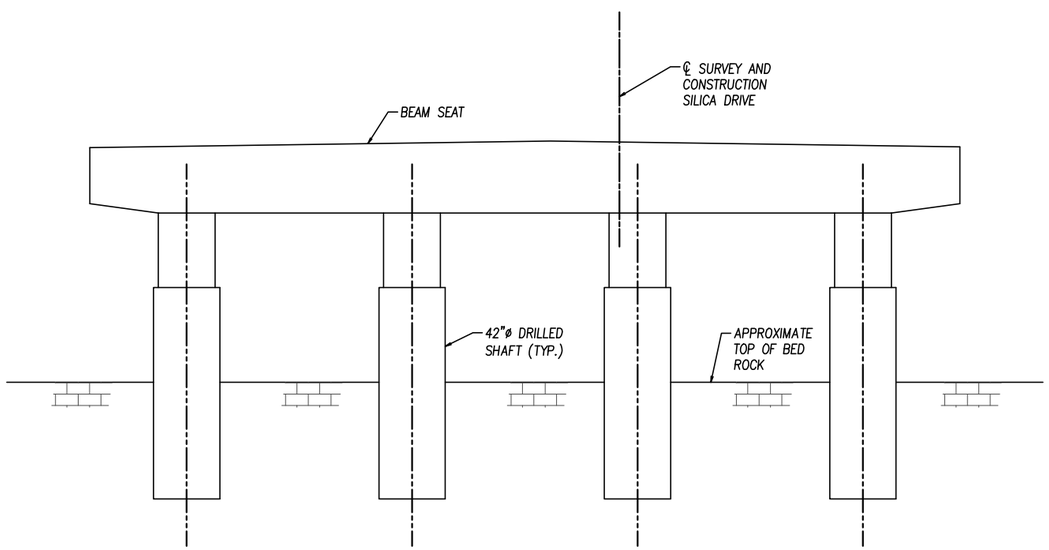

PRELIMINARY PIER ELEVATION

NOT FOR CONSTRUCTION
JUNE 21, 2019

DESIGN AGENCY
DGL Consulting Engineers, LLC
3455 Briarfield Blvd.-Suite E Maumee, OH 43537
(419) 535-1015

DESIGNED	DRAWN	REVIEWED	DATE
NBL	NBL	AEH	6-21-2019
CHECKED	REVISED	STRUCTURE FILE NUMBER	
AEH		XXXXXXX	

PRELIMINARY PIER DETAILS
SILICA DRIVE STRUCTURE TYPE STUDY
SILICA DRIVE OVER TEN MILE CREEK

CITY OF SYLVANIA
SILICA DRIVE

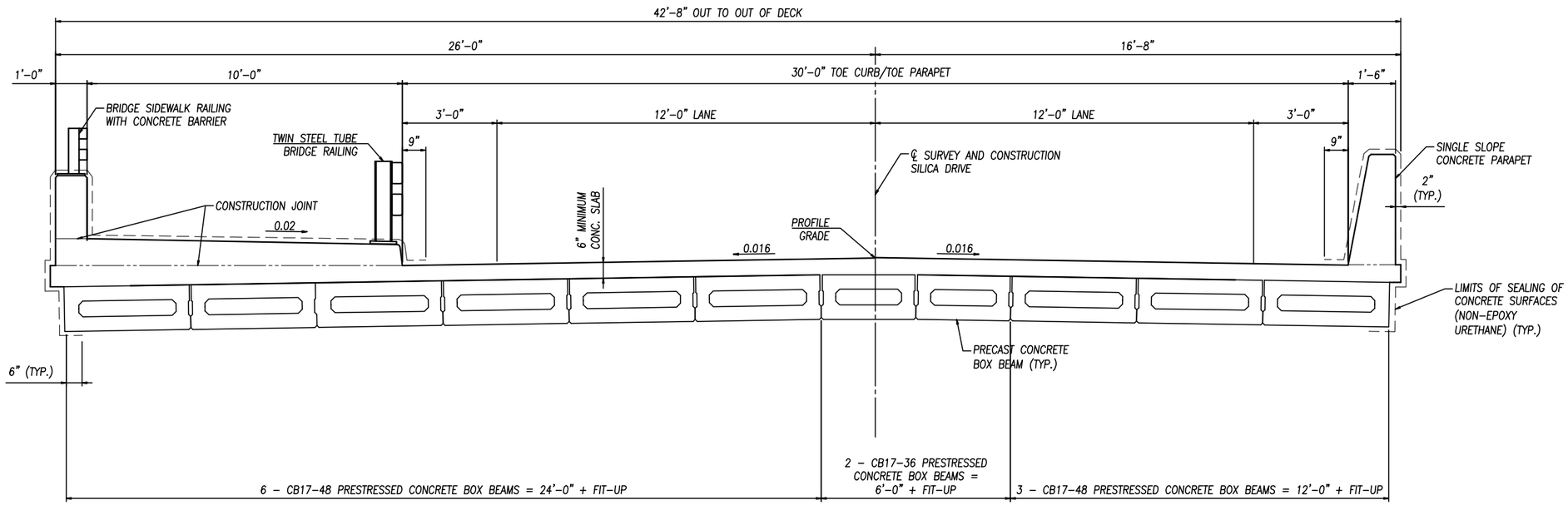

PRELIMINARY TRANSVERSE BRIDGE SECTION ALTERNATIVE #3 - PRESTRESSED CONCRETE BOX BEAMS (17" DEEP)

NOT FOR CONSTRUCTION
JUNE 21, 2019

DESIGN AGENCY
DGL Consulting Engineers, LLC
3455 Briarfield Blvd.-Suite E Maumee, OH 43537
(419) 535-1015

DESIGNED	DRAWN	REVIEWED	DATE
NBL	NBL	AEH	6-21-2019
CHECKED	REVISED	STRUCTURE FILE NUMBER	
AEH		XXXXXXX	

SUPERSTRUCTURE TRANSVERSE SECTION
SILICA DRIVE STRUCTURE TYPE STUDY
SILICA DRIVE OVER TEN MILE CREEK

CITY OF SYLVANIA
SILICA DRIVE

Appendix B:
Estimated Construction Cost

PRELIMINARY COST ESTIMATE
SILICA DRIVE OVER TEN MILE CREEK

Alternative #1 - Prestressed Concrete Box Beams on Wall Type Abutments

Additional Bridge Removal Costs					= $	30,000.00
Cofferdams and Excavation Bracing					= $	20,000.00
Epoxy Coated Reinforcing Steel						
47000	Lbs.	@	$	1.15	= $	54,050.00
Prestressed Concrete Box Beams (CB33-36)						
2	Each	@	$	19,000.00	= $	38,000.00
Prestressed Concrete Box Beams (CB33-48)						
9	Each	@	$	22,000.00	= $	198,000.00
Elastomeric Bearing Pads w/Internal Laminates						
44	Each	@	$	150.00	= $	6,600.00
Class QC2 Concrete, Superstructure (Railing/Parapet)						
30	C.Y.	@	$	1,200.00	= $	36,000.00
Class QC2 Concrete, Superstructure (Deck)						
70	C.Y.	@	$	700.00	= $	49,000.00
Class QC2 Concrete, Superstructure (Sidewalk)						
30	C.Y.	@	$	700.00	= $	21,000.00
Class QC2 Concrete, Superstructure (Approach Slab)						
240	S.Y.	@	$	275.00	= $	66,000.00
Twin Steel Tube Railing						
130	Feet	@	$	175.00	= $	22,750.00
Class QC1 Concrete, Substructure (Abutment)						
290	C.Y.	@	$	650.00	= $	188,500.00
Subtotal					= $	729,900.00
Add 15% Incidentals ±					= $	109,490.00
Total					= $	840,000.00

PRELIMINARY COST ESTIMATE
SILICA DRIVE OVER TEN MILE CREEK

Alternative #2 - Prestressed Concrete Box Beams on Spill-Thru Slopes

Additonal Approach Roadway Work (Profile Grade Adjustment)					= $	65,000.00
Cofferdams and Excavation Bracing					= $	20,000.00
Drilled Shaft, 36" Diameter, Above Bedrock						
120	Feet	@	$	100.00	= $	12,000.00
Drilled Shaft, 36" Diameter, Into Bedrock						
60	Feet	@	$	150.00	= $	9,000.00
Epoxy Coated Reinforcing Steel						
33000	Lbs.	@	$	1.15	= $	37,950.00
Prestressed Concrete Box Beams (CB42-36)						
2	Each	@	$	24,000.00	= $	48,000.00
Prestressed Concrete Box Beams (CB42-48)						
9	Each	@	$	27,000.00	= $	243,000.00
Elastomeric Bearing Pads w/Internal Laminates						
44	Each	@	$	150.00	= $	6,600.00
Class QC2 Concrete, Superstructure (Railing/Parapet)						
40	C.Y.	@	$	1,200.00	= $	48,000.00
Class QC2 Concrete, Superstructure (Deck)						
80	C.Y.	@	$	700.00	= $	56,000.00
Class QC2 Concrete, Superstructure (Sidewalk)						
40	C.Y.	@	$	700.00	= $	28,000.00
Class QC2 Concrete, Superstructure (Approach Slab)						
240	S.Y.	@	$	275.00	= $	66,000.00
Twin Steel Tube Railing						
160	Feet	@	$	175.00	= $	28,000.00
Class QC1 Concrete, Substructure (Abutment)						
130	C.Y.	@	$	550.00	= $	71,500.00
Subtotal					= $	739,050.00
Add 15% Incidentals ±					= $	110,860.00
Total					= $	850,000.00

PRELIMINARY COST ESTIMATE
SILICA DRIVE OVER TEN MILE CREEK

Alternative #3 - Prestressed Concrete Box Beams on Cap and Column Piers and Spill-Thru Slopes

Cofferdams and Excavation Bracing						= $	30,000.00
Drilled Shaft, 36" Diameter, Above Bedrock							
190	Feet	@	$	100.00		= $	19,000.00
Drilled Shaft, 36" Diameter, Into Bedrock							
60	Feet	@	$	150.00		= $	9,000.00
Drilled Shaft, 42" Diameter, Into Bedrock							
40	Feet	@	$	200.00		= $	8,000.00
Epoxy Coated Reinforcing Steel							
37000	Lbs.	@	$	1.15		= $	42,550.00
Prestressed Concrete Box Beams (CB17-48)							
33	Each	@	$	8,000.00		= $	264,000.00
Elastomeric Bearing Pads w/Internal Laminates							
132	Each	@	$	150.00		= $	19,800.00
Class QC2 Concrete, Superstructure (Railing/Parapet)							
40	C.Y.	@	$	1,200.00		= $	48,000.00
Class QC2 Concrete, Superstructure (Deck)							
80	C.Y.	@	$	700.00		= $	56,000.00
Class QC2 Concrete, Superstructure (Sidewalk)							
40	C.Y.	@	$	700.00		= $	28,000.00
Class QC2 Concrete, Superstructure (Approach Slab)							
240	S.Y.	@	$	275.00		= $	66,000.00
Class QC1 Concrete, Substructure (Pier)							
40	C.Y.	@	$	600.00		= $	24,000.00
Twin Steel Tube Railing							
160	Feet	@	$	175.00		= $	28,000.00
Class QC1 Concrete, Substructure (Abutment)							
130	C.Y.	@	$	550.00		= $	71,500.00
Subtotal						= $	713,850.00
Add 15% Incidentals ±						= $	107,080.00
Total						= $	821,000.00

PRELIMINARY COST ESTIMATE
SILICA DRIVE OVER TEN MILE CREEK

Alternative #4 - Prestressed Concrete AASHTO I-Beams on Wall Type Abutments

Additional Bridge Removal Costs						= $	30,000.00
Additonal Approach Roadway Work (Profile Grade Adjustment)						= $	60,000.00
Cofferdams and Excavation Bracing						= $	20,000.00
Epoxy Coated Reinforcing Steel							
60000	Lbs.	@	$	1.15		= $	69,000.00
Prestressed Concrete Bridge I-Beam Member (AASHTO WF36-49))							
6	Each	@	$	20,000.00		= $	120,000.00
Intermediate Diaphragms							
5	Each	@	$	1,600.00		= $	8,000.00
Elastomeric Bearing Pads w/Internal Laminates							
12	Each	@	$	1,300.00		= $	15,600.00
Class QC2 Concrete, Superstructure (Railing/Parapet)							
30	C.Y.	@	$	1,200.00		= $	36,000.00
Class QC2 Concrete, Superstructure (Deck)							
90	C.Y.	@	$	750.00		= $	67,500.00
Class QC2 Concrete, Superstructure (Sidewalk)							
30	C.Y.	@	$	750.00		= $	22,500.00
Class QC2 Concrete, Superstructure (Approach Slab)							
240	S.Y.	@	$	275.00		= $	66,000.00
Twin Steel Tube Railing							
130	Feet	@	$	175.00		= $	22,750.00
Class QC1 Concrete, Substructure (Abutment)							
290	C.Y.	@	$	650.00		= $	188,500.00
Subtotal						= $	725,850.00
Add 15% Incidentals ±						= $	108,880.00
Total						= $	835,000.00

PRELIMINARY COST ESTIMATE
SILICA DRIVE OVER TEN MILE CREEK

Alternative #5 - Prestressed Concrete AASHTO I-Beams on Spill-Thru Slopes

Additonal Approach Roadway Work (Profile Grade Adjustment)					= $	75,000.00
Cofferdams and Excavation Bracing					= $	20,000.00
Drilled Shaft, 36" Diameter, Above Bedrock						
120	Feet	@	$	100.00	= $	12,000.00
Drilled Shaft, 36" Diameter, Into Bedrock						
60	Feet	@	$	150.00	= $	9,000.00
Epoxy Coated Reinforcing Steel						
51000	Lbs.	@	$	1.15	= $	58,650.00
Prestressed Concrete Bridge I-Beam Member (AASHTO WF48-49))						
6	Each	@	$	30,000.00	= $	180,000.00
Intermediate Diaphragms						
15	Each	@	$	1,600.00	= $	24,000.00
Elastomeric Bearing Pads w/Internal Laminates						
12	Each	@	$	1,300.00	= $	15,600.00
Class QC2 Concrete, Superstructure (Railing/Parapet)						
40	C.Y.	@	$	1,200.00	= $	48,000.00
Class QC2 Concrete, Superstructure (Deck)						
120	C.Y.	@	$	750.00	= $	90,000.00
Class QC2 Concrete, Superstructure (Sidewalk)						
40	C.Y.	@	$	750.00	= $	30,000.00
Class QC2 Concrete, Superstructure (Approach Slab)						
240	S.Y.	@	$	275.00	= $	66,000.00
Twin Steel Tube Railing						
160	Feet	@	$	175.00	= $	28,000.00
Class QC1 Concrete, Substructure (Abutment)						
130	C.Y.	@	$	550.00	= $	71,500.00
Subtotal					= $	727,750.00
Add 15% Incidentals ±					= $	109,170.00
Total					= $	837,000.00

PRELIMINARY COST ESTIMATE
SILICA DRIVE OVER TEN MILE CREEK

Alternative #6 - Steel Beams on Wall Type Abutments

Additional Bridge Removal Costs					= $	30,000.00
Additional Approach Roadway Work					= $	45,000.00
Cofferdams and Excavation Bracing					= $	20,000.00
Epoxy Coated Reinforcing Steel						
60000	Lbs.	@	$	1.15	= $	69,000.00
Structural Steel						
135130	Lbs.	@	$	1.55	= $	209,451.50
Welded Stud Shear Connectors						
1188	Each	@	$	3.50	= $	4,158.00
Elastomeric Bearing Pads w/Internal Laminates						
12	Each	@	$	1,300.00	= $	15,600.00
Class QC2 Concrete, Superstructure (Railing/Parapet)						
30	C.Y.	@	$	1,200.00	= $	36,000.00
Class QC2 Concrete, Superstructure (Deck)						
90	C.Y.	@	$	750.00	= $	67,500.00
Class QC2 Concrete, Superstructure (Sidewalk)						
30	C.Y.	@	$	750.00	= $	22,500.00
Class QC2 Concrete, Superstructure (Approach Slab)						
240	S.Y.	@	$	275.00	= $	66,000.00
Twin Steel Tube Railing						
130	Feet	@	$	175.00	= $	22,750.00
Class QC1 Concrete, Substructure (Abutment)						
290	C.Y.	@	$	650.00	= $	188,500.00
Subtotal					= $	796,459.50
Add 15% Incidentals ±					= $	119,470.00
Total					= $	916,000.00

PRELIMINARY COST ESTIMATE
SILICA DRIVE OVER TEN MILE CREEK

Alternative #7 - Steel Beams on Spill-Thru Slopes

Approach Roadway Work						= $	65,000.00
Cofferdams and Excavation Bracing						= $	20,000.00
Drilled Shaft, 36" Diameter, Above Bedrock							
120	Feet	@	$	100.00		= $	12,000.00
Drilled Shaft, 36" Diameter, Into Bedrock							
60	Feet	@	$	150.00		= $	9,000.00
Epoxy Coated Reinforcing Steel							
51000	Lbs.	@	$	1.15		= $	58,650.00
Structural Steel							
278040	Lbs.	@	$	1.50		= $	417,060.00
Welded Stud Shear Connectors							
1566	Each	@	$	3.50		= $	5,481.00
Elastomeric Bearing Pads w/Internal Laminates							
12	Each	@	$	1,300.00		= $	15,600.00
Class QC2 Concrete, Superstructure (Railing/Parapet)							
40	C.Y.	@	$	1,200.00		= $	48,000.00
Class QC2 Concrete, Superstructure (Deck)							
120	C.Y.	@	$	750.00		= $	90,000.00
Class QC2 Concrete, Superstructure (Sidewalk)							
40	C.Y.	@	$	750.00		= $	30,000.00
Class QC2 Concrete, Superstructure (Approach Slab)							
240	S.Y.	@	$	275.00		= $	66,000.00
Twin Steel Tube Railing							
160	Feet	@	$	175.00		= $	28,000.00
Class QC1 Concrete, Substructure (Abutment)							
130	C.Y.	@	$	550.00		= $	71,500.00
Subtotal						= $	936,291.00
Add 15% Incidentals ±						= $	140,450.00
Total						= $	1,077,000.00

PRELIMINARY STRUCTURE COST COMPARISON
SILICA DRIVE OVER TEN MILE CREEK
(STRUCTURE CONSTRUCTION COSTS ONLY)

		Initial Bridge Construction Costs
Alternative #1	Prestressed Concrete Box Beams on Wall Type Abutments	$840,000
Alternative #2	Prestressed Concrete Box Beams on Spill-Thru Slopes	$850,000
Alternative #3	Prestressed Concrete Box Beams on Cap and Column Piers and Spill-Thru Slopes	$821,000
Alternative #4	Prestressed Concrete AASHTO I-Beams on Wall Type Abutments	$835,000
Alternative #5	Prestressed Concrete AASHTO I-Beams on Spill-Thru Slopes	$837,000
Alternative #6	Steel Beams on Wall Type Abutments	$916,000
Alternative #7	Steel Beams on Spill-Thru Slopes	$1,077,000

PRELIMINARY PROJECT COST ESTIMATE
SILICA DRIVE OVER TEN MILE CREEK
(TOTAL PROJECT COSTS)

Project Item	*Estimated Costs*	
Bridge Removal	$100,000	(A)
Structure Construction	$821,000	(B)
Roadway and Approach Work	$50,000	(C)
Sub-Total	$971,000	(D) = (A+B+C)
Inflation (2023 FY) (14%)	$135,940	(E) = 0.14 x (D)
Sub-Total	$1,106,940	(F) = (D + E)
Construction Engineering & Material Testing (15%)	$166,041	(G) =0.15 x (F)
Sub-Total (Municipal Bridge Funding Eligible)	$1,272,981	(H) = (F + G)
Engineering Design (15%)	$166,041	(I) =0.15 x (F)
Right-Of-Way Acquisition	$50,000	(J)
Environmental & Geotechnical	$50,000	(K)
Preliminary Estimated Total Project Cost	$1,540,000	(L) = H+I+J+K

CY 2019-2023 Business Plan Inflation Calculator:

Not sure if you have the latest calculator? Click here.

Last Modified: 1/15/2019

Today's Date:
May 30, 2019

Please Enter Values in the Yellow Areas Only:

Estimation Start Date:
Less than or Equal to Today's Date
(mm/dd/yyyy)

5/30/2019
Start Date:

Enter Construction Mid-Point Date:
(cannot exceed 05/30/2044)
(mm/dd/yyyy)

7/29/2023
Construction Mid-Point Date:

Present-Day Estimated Cost:

$1.00
Estimated Dollar Amount:

Estimate Start Date to Construction Mid-Point Date: **50** **Months**

Inflation - Start to Mid-Point of Construction:

(compounded growth rate)

Inflated Dollar Amount:

Business Plan **14.0%** **$1.14**

Estimator's Name:

County - Route - Section:

PID:

Estimator's Notes:

Appendix C:
ODOT Standard Drawings

OFFICE OF STRUCTURAL ENGINEERING

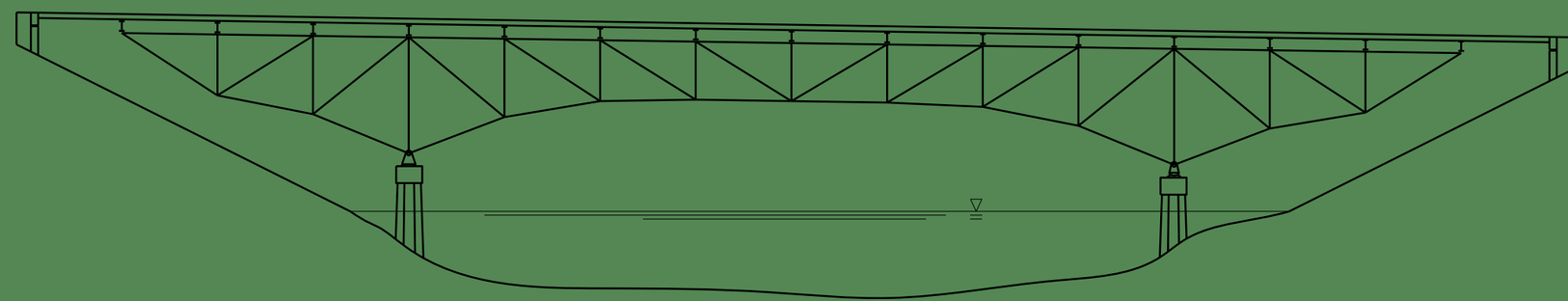

STANDARD BRIDGE DRAWINGS

ENGLISH UNITS

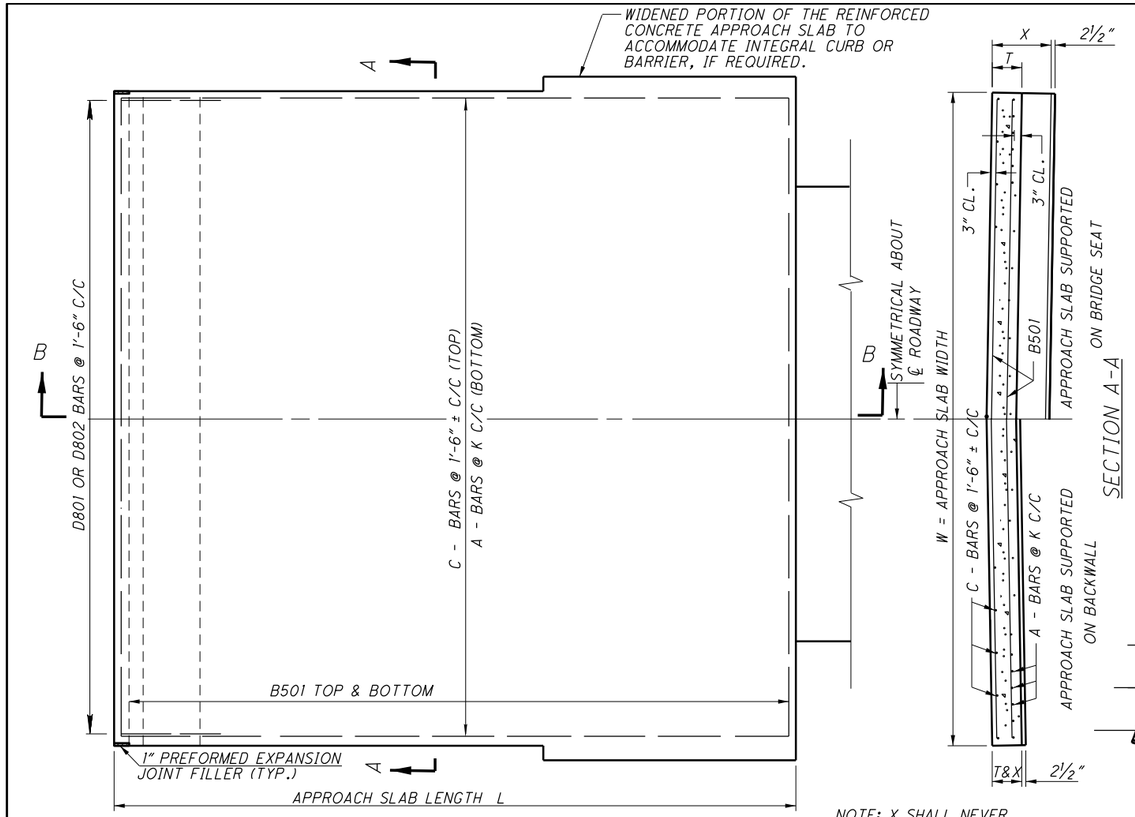

PLAN

SECTION A-A

NOTE: X SHALL NEVER BE LESS THAN T

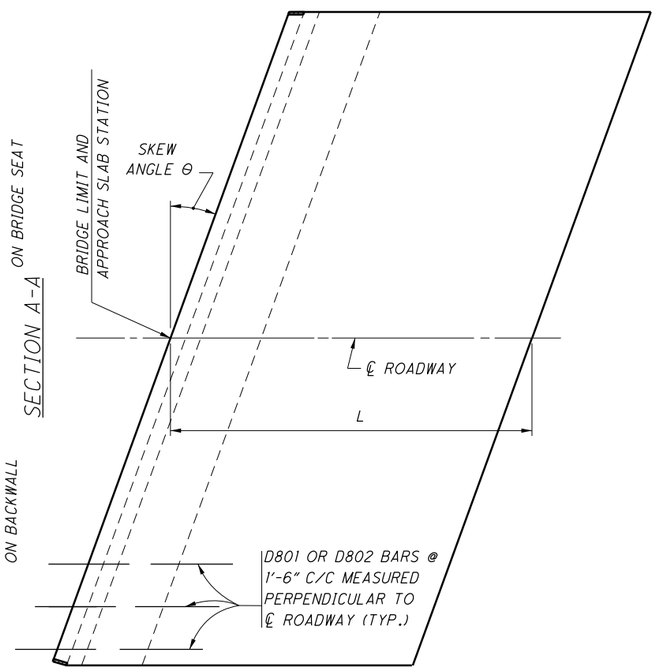

APPROACH SLAB FOR SKEWED STRUCTURE

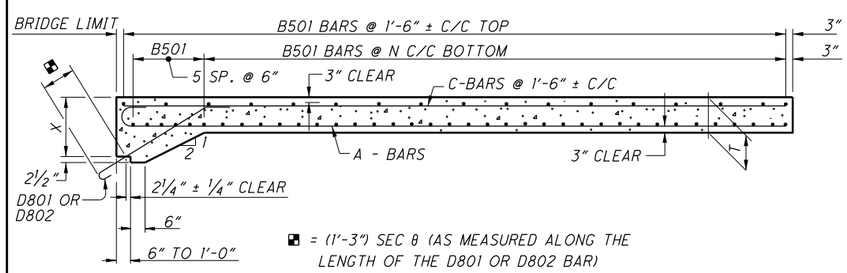

■ = (1'-3") SEC θ (AS MEASURED ALONG THE LENGTH OF THE D801 OR D802 BAR)

SECTION B-B

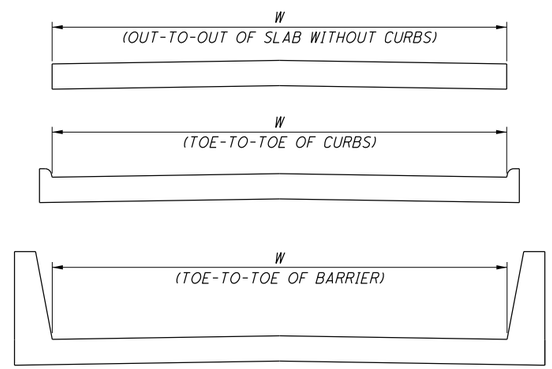

APPROACH SLAB WIDTH DIMENSIONS

REINFORCING STEEL (FOR ONE APPROACH SLAB)															
LENGTH L	THICK-NESS T	A-BARS					B501 (BOTTOM)			B501 (TOP)		C-BARS			D801 OR D802
		SP'C'G K	MARK	LENGTH	DIMENSION A	NO. REQ'D.	* LENGTH	SP'C'G N	NO. REQ'D.	* LENGTH	NO. REQ'D.	MARK	LENGTH	NO. REQ'D.	NO. REQ'D.
15'-0"	12"	10"	A1001	15'-11"	14'-6"	$12\left[\frac{W-0.5}{K}\right]+1$	(W-0.5)sec Θ	9"	22	(W-0.5)sec Θ	11	C501	14'-6"	$12\left[\frac{W-0.5}{18}\right]+1$	$12\left[\frac{W-0.5}{18}\right]+1$
20'-0"	13"	7½"	A1002	20'-11"	19'-6"			8"	31		14	C502	19'-6"		
25'-0"	15"	7"	A1003	25'-11"	24'-6"			8"	39		18	C503	24'-6"		
30'-0"	17"	6½"	A1004	30'-11"	29'-6"			8½"	44		21	C504	29'-6"		

W = APPROACH SLAB WIDTH, IN FEET (SEE APPROACH SLAB WIDTH DIMENSIONS)
Θ = ANGLE OF SKEW
K = A-BAR SPACING IN INCHES
N = B-BAR SPACING IN INCHES
X = APPROACH SLAB THICKNESS AT ABUTMENT END IN FEET
% = OUT TO OUT

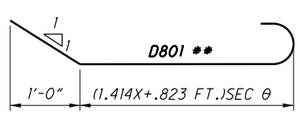

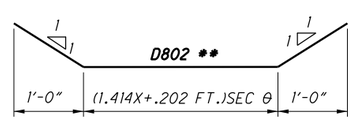

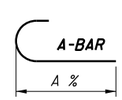

* AT THE OPTION OF THE CONTRACTOR AND AT NO ADDITIONAL COST TO THE STATE, B501 BARS MAY BE LAPPED 2'-6" MINIMUM AT THE CENTERLINE OF ROADWAY IN LIEU OF PROVIDING FULL LENGTH BARS AS SHOWN.

** THE D801 OR D802 ANCHOR BARS SHALL BE DIMENSIONED IN THE CONTRACT PLANS AND INCLUDED WITH ITEM 509 FOR PAYMENT FOR EACH SPECIFIC BRIDGE. D801 BARS CANNOT BE USED AS SHOWN IF APPROACH SLABS ARE SUPPORTED ON BACKWALLS LESS THAN 14 INCHES THICK. D802 BARS SHALL BE USED ON PRESTRESSED CONCRETE BOX BEAM BRIDGES WITH APPROACH SLABS SUPPORTED ON BACKWALLS 11 INCHES THICK.

GENERAL: THIS DRAWING PROVIDES DESIGN AND GENERAL CONSTRUCTION DETAILS. THE PROJECT PLANS WILL SHOW LENGTH, SKEW, CURBS (IF ANY), ESTIMATED QUANTITY (SQUARE YARDS), AND SPECIAL NOTES AND DETAILS WHERE NECESSARY. FOR CONDITIONS OTHER THAN THOSE INDICATED HEREON, THE APPROACH SLAB SHALL BE ADAPTED TO FIT THE ENDS OF THE BRIDGE AND THE APPROACH PAVEMENT.

DESIGN SPECIFICATIONS: THIS STANDARD DRAWING CONFORMS TO THE "AASHTO LRFD BRIDGE DESIGN SPECIFICATIONS" ADOPTED BY THE AMERICAN ASSOCIATION OF STATE HIGHWAY AND TRANSPORTATION OFFICIALS, 2014 AND THE ODOT BRIDGE DESIGN MANUAL, 2007.

DESIGN DATA:
DESIGN LOADING: DEAD LOAD - 60 LB/FT² (F.W.S.)
LIVE LOAD - HL-93
CONCRETE - COMPRESSIVE STRENGTH = 4,500 PSI.
REINFORCING STEEL - MIN. YIELD STRENGTH = 60,000 PSI.

REINFORCING STEEL FOR SKEWED BRIDGES: THE A AND C BARS SHALL BE PLACED PARALLEL TO THE CENTER LINE OF ROADWAY AND THE B BARS SHALL BE PLACED PARALLEL TO THE ABUTMENTS.

LONGITUDINAL CONSTRUCTION JOINTS REQUIRED FOR STAGE CONSTRUCTION SHALL BE ACCORDING TO 511. PROVIDE 2'-6" LAP SPLICE OF B501 BARS OR PROVIDE MECHANICAL CONNECTORS PER C&MS 509.07.

CURBS, BRIDGES WITH SIDEWALKS: FOR BRIDGES CONSTRUCTED WITH RAISED SIDEWALKS, DEFLECTOR PARAPETS OR OTHER TYPES OF CONSTRUCTION WHICH RETAIN ROADWAY SURFACE DRAINAGE, THE APPROACH SLABS SHALL EITHER INCLUDE INTEGRAL CURBS OR BE CONSTRUCTED IN CONJUNCTION WITH BRIDGE CURBS. CURB HEIGHT SHALL BE TRANSITIONED UNIFORMLY BETWEEN BRIDGE CURB HEIGHT AND ROADWAY CURB HEIGHT IN A LENGTH AS FOLLOWS: WHERE WINGWALL EXTENDS BEYOND END OF APPROACH SLAB, USE A MINIMUM LENGTH OF 10 FEET BEYOND END OF WINGWALL. WHERE THE APPROACH SLAB EXTENDS BEYOND THE END WINGWALL, TRANSITION IN THIS LENGTH. HOWEVER, THE TRANSITION LENGTH SHALL NOT BE LESS THAN 10 FEET AND THE TRANSITION SHALL EXTEND BEYOND THE END OF APPROACH SLAB IF NECESSARY.

APPROACH SLAB LENGTH (L): THE LENGTH SHALL BE SHOWN ON THE PROJECT PLANS.

DECK CROWN AND SLOPE: THE LOCATION OF THE CROWN POINT AND THE RATE OF CROSS SLOPE ON THE APPROACH SLAB SHALL CONFORM TO THAT OF THE BRIDGE DECK AND APPROACH PAVEMENT. IF THE RATE OF CROSS SLOPE OF THE BRIDGE DECK DIFFERS FROM THAT OF THE APPROACH PAVEMENT, A SMOOTH TRANSITION SHALL BE PROVIDED WITHIN THE LIMITS OF THE APPROACH SLAB.

BASIS OF PAYMENT: A PAY ITEM FOR "ITEM 526 - REINFORCED CONCRETE APPROACH SLABS" SHALL BE SHOWN IN THE ESTIMATED QUANTITIES TABLE. IN ADDITION TO THE INCIDENTAL ITEMS LISTED IN 526.08, THE DEPARTMENT WILL INCLUDE THE FOLLOWING ITEMS FOR PAYMENT: ALL PREFORMED EXPANSION JOINT FILLER AND JOINT SEALER AT APPROACH SLAB JOINTS, THE TYPE "A" OR "E" WATERPROOFING, AND THE PREFORMED ELASTOMERIC COMPRESSION JOINT SEAL AT THE BRIDGE LIMIT END OF THE APPROACH SLAB.

THE DEPARTMENT WILL PAY FOR ANCHOR BARS (D801 OR D802) SEPARATELY. THE DEPARTMENT WILL ALSO PAY FOR CONCRETE BARRIER AND ALL BARRIER REINFORCEMENT SEPARATELY.

DESIGN AGENCY
OFFICE OF STRUCTURAL ENGINEERING

STATE OF OHIO DEPARTMENT OF TRANSPORTATION
01-16-15
DATE
ADMINISTRATOR

REVISIONS
07-17-15

AS-1-15

STANDARD BRIDGE DRAWING
REINFORCED CONCRETE APPROACH SLAB

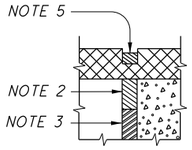

DETAIL A

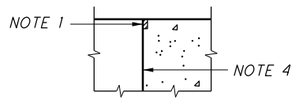

DETAIL B

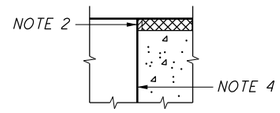

DETAIL C

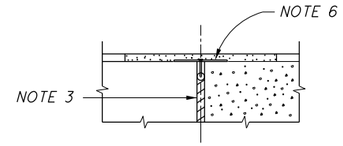

DETAIL D

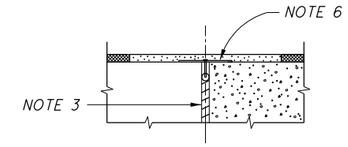

DETAIL E

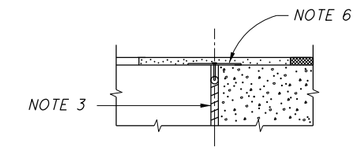

DETAIL F

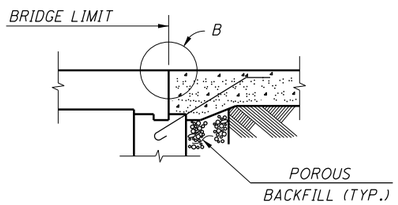

ON SLAB BRIDGES

CONCRETE WEARING SURFACE ON BRIDGE DECK AND APPROACH SLAB

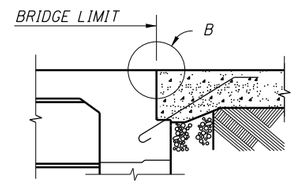

ON BRIDGES WITH INTEGRAL CONSTRUCTION

(SEMI-INTEGRAL SIMILAR)

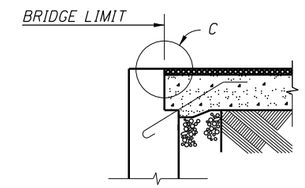

APPROACH SLAB SUPPORTED ON ABUTMENT BACKWALL

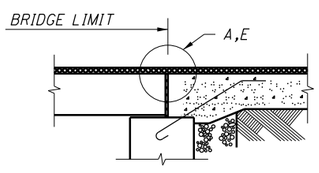

ON PRESTRESSED CONCRETE BOX BEAM BRIDGES ◐

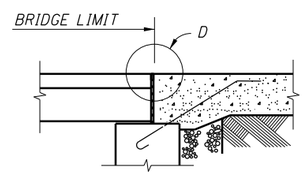

ON PRESTRESSED CONCRETE BOX BEAM BRIDGES ◐

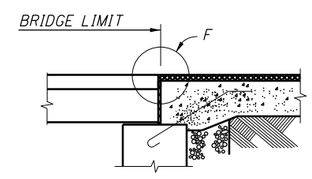

ON PRESTRESSED CONCRETE BOX BEAM BRIDGES ◐

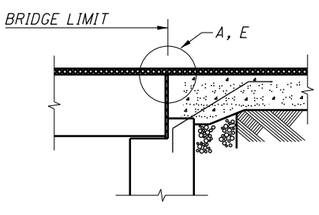

APPROACH SLAB SUPPORTED ON ABUTMENT BACKWALL

ASPHALT CONCRETE WEARING SURFACE ON BRIDGE DECK AND APPROACH SLAB

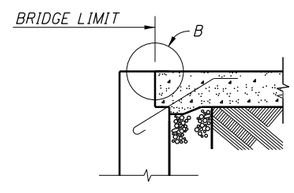

APPROACH SLAB SUPPORTED ON ABUTMENT BACKWALL

CONCRETE WEARING SURFACE ON BRIDGE DECK AND APPROACH SLAB

CONCRETE WEARING SURFACE ON BRIDGE DECK ONLY

◐ - THE APPROACH SLAB SEAT FOR THIS PRESTRESSED CONCRETE BOX BEAM BRIDGE IS SHOWN AT THE SAME ELEVATION AS THE BEAM SEAT. HOWEVER, IT MAY ACTUALLY BE HIGHER OR LOWER THAN THE BEAM SEAT DEPENDING ON THE BOX BEAM DEPTH.

NOTE 1: PREFORMED ELASTOMERIC COMPRESSION JOINT SEAL, 705.11 (1¼" WIDE FOR A ½" WIDE GROOVE) PLACED IN ½" x 2¼" GROOVE.

NOTE 2: 2" DEEP x 1" WIDE HOT APPLIED JOINT SEALER, 705.04.

NOTE 3: 1" PREFORMED EXPANSION JOINT FILLER, 705.03.

NOTE 4: TYPE "A" OR TYPE "E" WATERPROOFING.

NOTE 5: SEE C&MS ITEM 409 - SAWING AND SEALING ASPHALT CONCRETE PAVEMENT JOINTS

NOTE 6: SEE SUPPLEMENTAL SPECIFICATION 846, "POLYMER MODIFIED ASPHALT EXPANSION JOINT SYSTEM"

TYPE "A" OR "E" WATERPROOFING SHALL NOT EXTEND ABOVE THE BOTTOM OF THE GROOVE INTO WHICH THE PREFORMED ELASTOMERIC COMPRESSION JOINT SEAL IS TO BE PLACED. IT SHALL BE APPLIED TO THE ENTIRE AREA OF THE ABUTMENT OR SUPER-STRUCTURE WHICH COMES INTO CONTACT WITH THE APPROACH SLAB.

FOR PRESTRESSED CONCRETE BOX BEAM BRIDGES WITH ASPHALT CONCRETE ON BOTH BRIDGE DECK AND APPROACH SLAB, THE TOP OF APPROACH SLAB AT THE BRIDGE END SHALL BE CONSTRUCTED TO THE LEVEL OF THE TOP OF THE BEAMS TO FACILITATE WATERPROOFING OF THE JOINT. THE THICKNESS OF ASPHALT CONCRETE AT THE APPROACH END OF THE SLAB SHALL BE THE THICKNESS OF ASPHALT CONCRETE USED ON THE ROADWAY PAVEMENT. THE THICKNESS OF ASPHALT CONCRETE SHALL VARY UNIFORMLY, IF NECESSARY, IN THE LENGTH OF THE APPROACH SLAB. THE SUBGRADE (SUBBASE) SHALL BE GRADED TO PERMIT THE BOTTOM OF THE APPROACH SLAB TO BE PARALLEL TO THE TOP.

FOR STRUCTURES WITHOUT STRIP SEAL, COMPRESSION SEAL OR POLYMER MODIFIED ASPHALT EXPANSION JOINTS, THAT HAVE AN ASPHALT CONCRETE WEARING SURFACE ON BOTH THE BRIDGE DECK AND APPROACH SLAB, EXTEND THE DECK WATERPROOFING 2'-0" BEYOND THE BRIDGE LIMITS. FOR STRUCTURES WITH STRIP SEAL AND COMPRESSION SEAL EXPANSION JOINTS, END THE DECK WATERPROOFING AT THE PRESTRESSED BOX BEAM NOTCH. FOR STRUCTURES WITH POLYMER MODIFIED ASPHALT EXPANSION JOINTS, EXTEND THE DECK WATERPROOFING TO THE CENTERLINE OF THE JOINT.

DESIGN AGENCY
OFFICE OF STRUCTURAL ENGINEERING

STATE OF OHIO DEPARTMENT OF TRANSPORTATION

01-16-15
DATE

ADMINISTRATOR

REVISIONS
07-17-15

AS-1-15

STANDARD BRIDGE DRAWING
REINFORCED CONCRETE APPROACH SLAB

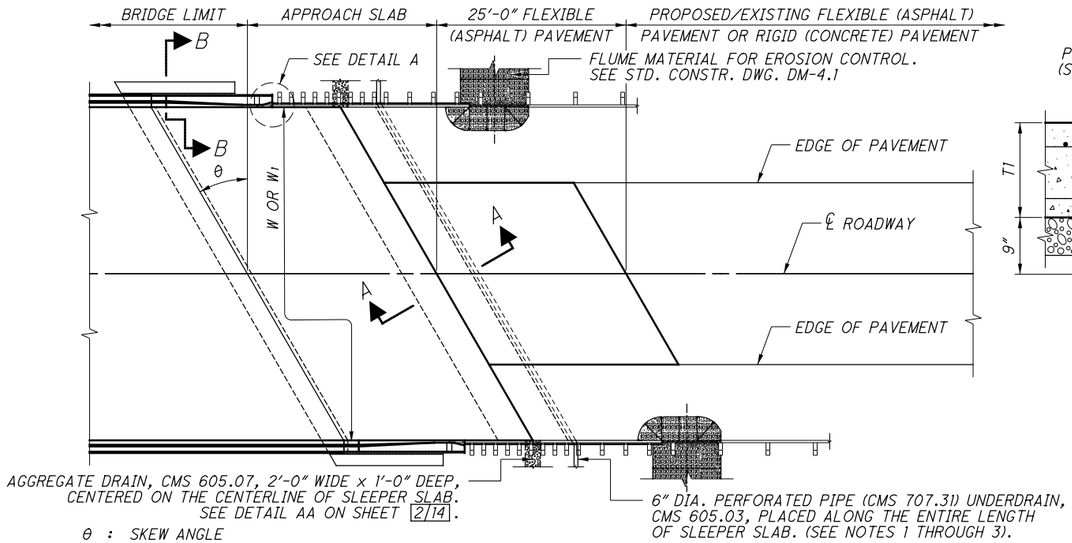

θ : SKEW ANGLE

W : APPROACH SLAB WIDTH (OUT-TO-OUT) WITHOUT INTEGRAL CURB

W1 : APPROACH SLAB WIDTH (OUT-TO-OUT) WITH INTEGRAL CURB

PLAN

JOINTLESS SUPERSTRUCTURE WITH CAST-IN-PLACE CONCRETE TURNBACK WINGWALLS SHOWN
JOINTED SUPERSTRUCTURE WITH CAST-IN-PLACE CONCRETE TURNBACK WINGWALLS SIMILAR

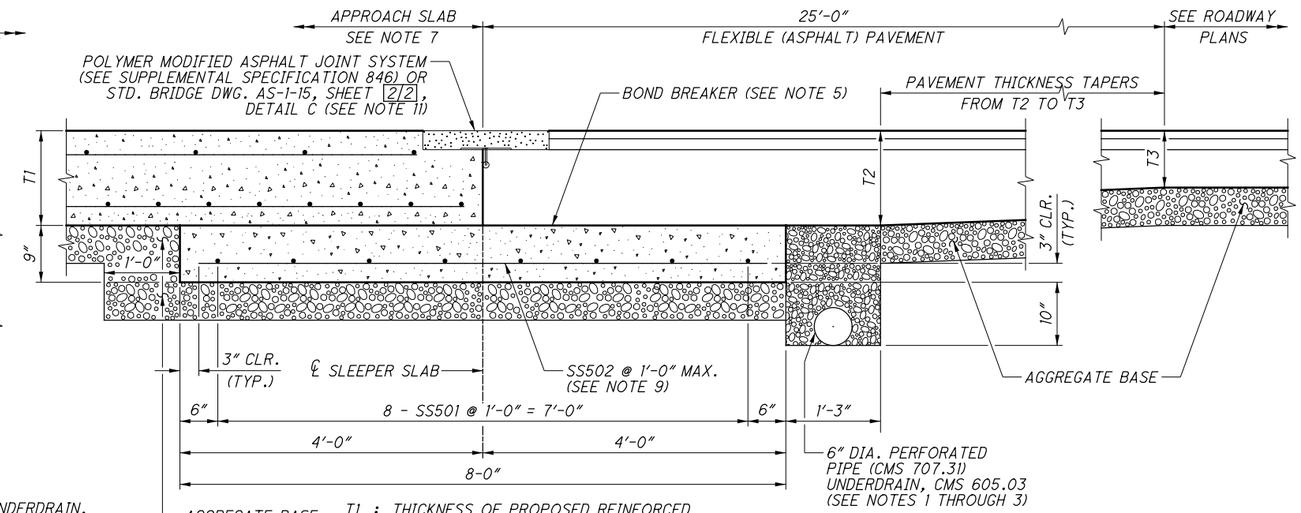

T1 : THICKNESS OF PROPOSED REINFORCED CONCRETE APPROACH SLAB (SEE BRIDGE PLANS AND NOTE 4)

T2 : THICKNESS OF THE 25-FOOT FLEXIBLE (ASPHALT) PAVEMENT (SEE ROADWAY PLANS AND NOTE 4)

T3 : THICKNESS OF PROPOSED/EXISTING PAVEMENT (SEE ROADWAY PLANS)

SECTION A-A

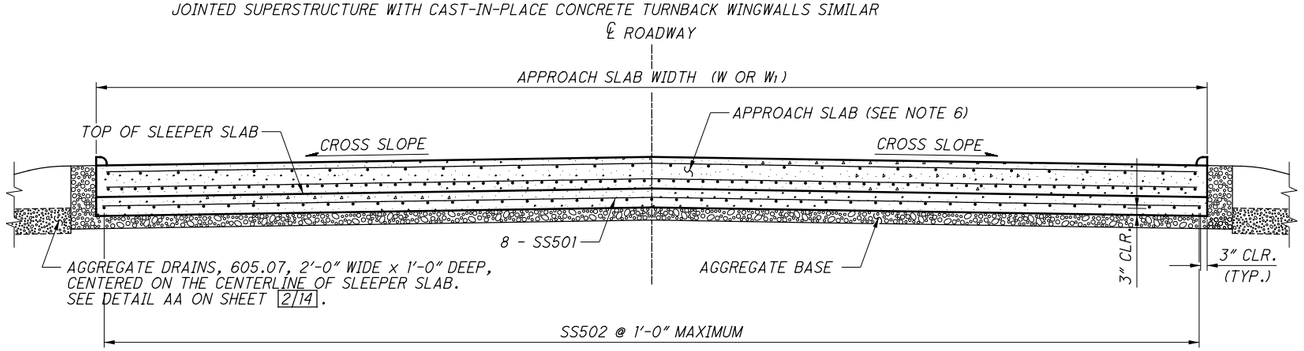

ELEVATION

TAKEN PERPENDICULAR TO ℄ ROADWAY, LOOKING UP-STATION
CAST-IN-PLACE CONCRETE TURNBACK WINGWALLS AND 6" DIA. PERFORATED PIPE UNDERDRAIN NOT SHOWN

INDEX OF DRAWINGS

SHEET NO.	DESCRIPTION
1 OF 14	TYPE A INSTALLATION
2 OF 14	TYPE A INSTALLATION (ADDITIONAL DETAILS, NOTES, AND SECTIONS)
3 OF 14	TYPE B INSTALLATION (WITH PROPOSED FLEXIBLE (ASPHALT) PAVEMENT)
4 OF 14	TYPE B INSTALLATION (WITH PROPOSED RIGID (CONCRETE) PAVEMENT)
5 OF 14	TYPE B INSTALLATION (ADDITIONAL DETAILS, NOTES, AND SECTIONS)
6 OF 14	TYPE C INSTALLATION (WITH MSE WALLS AND PROPOSED FLEXIBLE (ASPHALT) PAVEMENT)
7 OF 14	
8 OF 14	
9 OF 14	TYPE C INSTALLATION (WITH CAST-IN-PLACE CONCRETE TURNBACK WINGWALLS AND PROPOSED FLEXIBLE (ASPHALT) PAVEMENT)
10 OF 14	
11 OF 14	
12 OF 14	TYPE C INSTALLATION (WITH MSE WALLS AND PROPOSED RIGID (CONCRETE) PAVEMENT)
13 OF 14	TYPE C INSTALLATION (WITH CAST-IN-PLACE CONCRETE TURNBACK WINGWALLS AND PROPOSED RIGID (CONCRETE) PAVEMENT)
14 OF 14	GENERAL NOTES

REINFORCING STEEL FOR SLEEPER SLAB

MARK	LENGTH	TYPE	BENDING DIAGRAMS
SS501	A	STR	A — SS501
SS502	B	STR	B — SS502

W : APPROACH SLAB WIDTH (OUT-TO-OUT) WITHOUT INTEGRAL CURB

θ : SKEW ANGLE

$A : \frac{W - 0.5'}{\cos \theta}$

θ : SKEW ANGLE

$B : \frac{7.5'}{\cos \theta}$

NOTES:

1. 6" DIA. PERFORATED PIPE (CMS 707.31) UNDERDRAIN (CMS 605.03) INCLUDING GRANULAR MATERIAL IS ONLY REQUIRED IF THE LONGITUDINAL SLOPE OF THE AGGREGATE BASE IS TOWARDS THE APPROACH SLAB AND SLEEPER SLAB.
2. 6" DIA. PERFORATED PIPE (CMS 707.31) UNDERDRAIN (CMS 605.03), IF REQUIRED, SHALL BE SLOPED THE SAME AS THE PAVEMENT CROSS SLOPE.
3. FOR ADDITIONAL NOTES AND DETAILS AT PIPE OUTLET ENDS, SEE STD. CONSTR. DWG. DM-1.1. FOR PIPE INSTALLATIONS SEE STD. CONSTR. DWG. DM-1.2.
4. THICKNESS OF THE PROPOSED 25-FOOT FLEXIBLE (ASPHALT) PAVEMENT (T2) SHALL MATCH THE THICKNESS OF PROPOSED REINFORCED CONCRETE APPROACH SLAB (T1).
5. APPLY BOND BREAKER TO THE ENTIRE TOP SURFACE OF THE CONCRETE SLEEPER SLAB. SEE "REINFORCED CONCRETE SLEEPER SLAB SURFACE FINISH AND BOND BREAKER" NOTE ON SHEET 14/14.
6. THE CROSS SLOPES AT THE TOP AND BOTTOM OF THE SLEEPER SLAB SHALL CONFORM TO THAT OF THE REINFORCED CONCRETE APPROACH SLAB.
7. FOR APPROACH SLAB REINFORCING STEEL AND ADDITIONAL DETAILS, SEE STD. BRIDGE DWG. AS-1-15.
8. SEE SHEET 2/14 FOR REINFORCED CONCRETE APPROACH SLAB WITH OPTIONAL ASPHALT CONCRETE WEARING COURSES, DETAIL A, LIMITS OF AGGREGATE DRAIN, SECTION B-B, AND ADDITIONAL NOTES.
9. REBARS SS502 SHALL BE PLACED PARALLEL TO CENTERLINE OF ROADWAY. THE SPACING SHALL BE MEASURED PERPENDICULAR TO CENTERLINE OF ROADWAY. THE REBAR LAYOUT FOR SLEEPER SLAB WILL BE SIMILAR TO SLEEPER SLAB REBAR LAYOUT SHOWN IN DETAIL A, SHEET 7/14.
10. PLACE DRAINS AND OUTLETS ON THE LOW SIDE OF SUPERELEVATED APPROACH SLABS AND BOTH SIDES IF THE APPROACH SLABS IS CROWNED.
11. IF PLANS INCLUDE PAY ITEM FOR SUPPLEMENTAL SPECIFICATION 846, AT THIS LOCATION, PROVIDE A 20" WIDE X 3" THICK POLYMER MODIFIED EXPANSION JOINT SYSTEM AS SHOWN. THE TOP LONGITUDINAL REBARS AT THE ROADWAY END OF THE APPROACH SLAB SHALL BE SHORTENED AND THE SPACINGS FOR THE TOP TRANSVERSE REBARS SHALL BE ADJUSTED IN ORDER TO AVOID INTERFERENCE WITH THE POLYMER MODIFIED ASPHALT JOINT SYSTEM. HOWEVER, IF PLANS DO NOT INCLUDE PAY ITEM FOR SUPPLEMENTAL SPECIFICATION 846 AT THIS LOCATION, APPLY JOINT SEALER AS SHOWN IN STD. BRIDGE DWG. AS-1-15, SHEET 2/2, DETAIL C.

DESIGN AGENCY
OFFICE OF STRUCTURAL ENGINEERING

STATE OF OHIO DEPARTMENT OF TRANSPORTATION
01-16-15
DATE
ADMINISTRATOR

REVISIONS
07-17-15
01-19-18

AS-2-15

STANDARD BRIDGE DRAWING
APPROACH SLAB INSTALLATION (TYPE A)

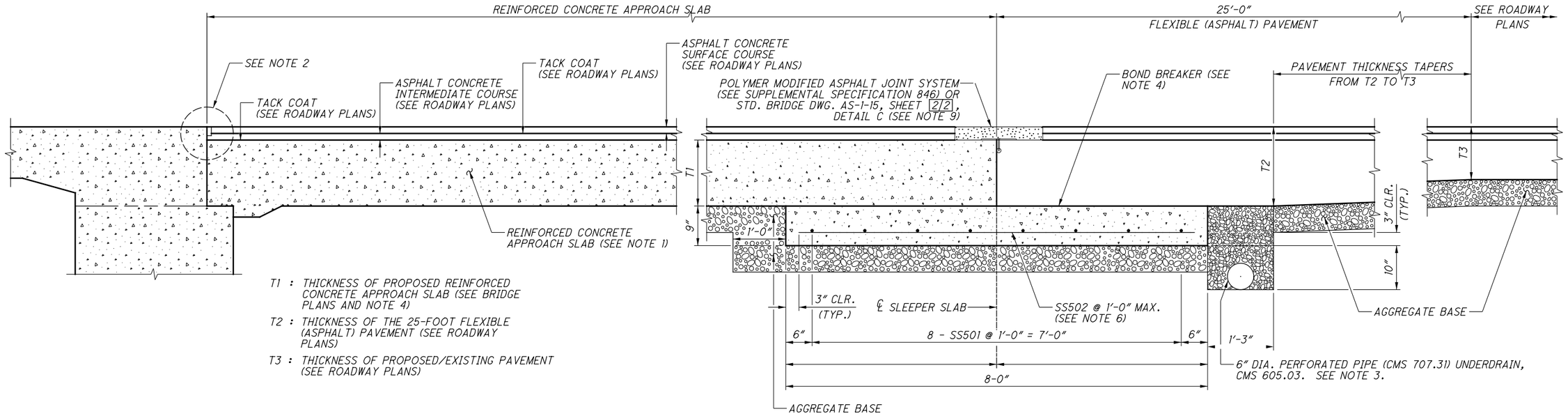

T1 : THICKNESS OF PROPOSED REINFORCED CONCRETE APPROACH SLAB (SEE BRIDGE PLANS AND NOTE 4)

T2 : THICKNESS OF THE 25-FOOT FLEXIBLE (ASPHALT) PAVEMENT (SEE ROADWAY PLANS)

T3 : THICKNESS OF PROPOSED/EXISTING PAVEMENT (SEE ROADWAY PLANS)

REINFORCED CONCRETE APPROACH SLAB WITH OPTIONAL ASPHALT CONCRETE WEARING COURSES

REINFORCED CONCRETE ABUTMENT AND APPROACH SLAB REINFORCING STEEL NOT SHOWN

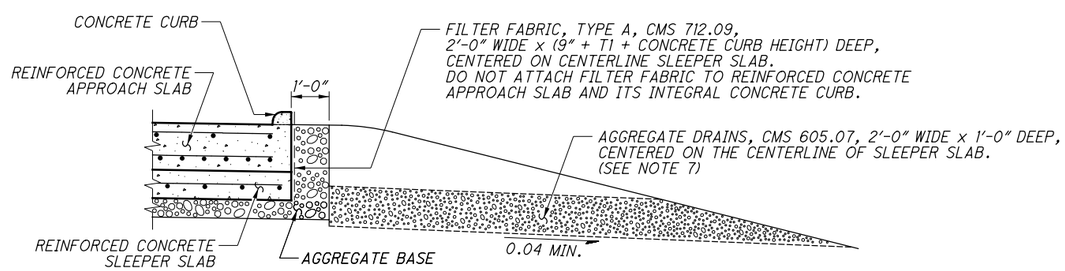

DETAIL AA

MIDWEST GUARDRAIL SYSTEM NOT SHOWN

NOTES:

1. FOR APPROACH SLAB REINFORCING STEEL AND ADDITIONAL DETAILS, SEE STD. BRIDGE DWG. AS-1-15.
2. SEE STD. BRIDGE DWG. AS-1-15, SHEET 2/2, DETAIL C.
3. SEE NOTES 1 THROUGH 3 ON SHEET 1/14.
4. APPLY BOND BREAKER TO THE ENTIRE TOP SURFACE OF THE CONCRETE SLEEPER SLAB. SEE "REINFORCED CONCRETE SLEEPER SLAB SURFACE FINISH AND BOND BREAKER" NOTE ON SHEET 14/14.
5. FOR SLEEPER SLAB REINFORCING STEEL LIST, SEE SHEET 1/14.
6. REBARS SS502 SHALL BE PLACED PARALLEL TO CENTERLINE OF ROADWAY. THE SPACING SHALL BE MEASURED PERPENDICULAR TO CENTERLINE OF ROADWAY. THE REBAR LAYOUT FOR SLEEPER SLAB WILL BE SIMILAR TO SLEEPER SLAB REBAR LAYOUT SHOWN IN DETAIL A, SHEET 7/14.
7. PLACE DRAINS AND OUTLETS ON THE LOW SIDE OF SUPERELEVATED APPROACH SLABS AND BOTH SIDES IF THE APPROACH SLABS IS CROWNED.
8. FOR GENERAL NOTES, SEE SHEET 14/14.
9. IF PLANS INCLUDE PAY ITEM FOR SUPPLEMENTAL SPECIFICATION 846 AT THIS LOCATION, PROVIDE A 20" WIDE X 3" THICK POLYMER MODIFIED EXPANSION JOINT SYSTEM AS SHOWN. HOWEVER, IF PLANS DO NOT INCLUDE PAY ITEM FOR SUPPLEMENTAL SPECIFICATION 846 AT THIS LOCATION, APPLY JOINT SEALER AS SHOWN IN STD. BRIDGE DWG. AS-1-15, SHEET 2/2, DETAIL A.

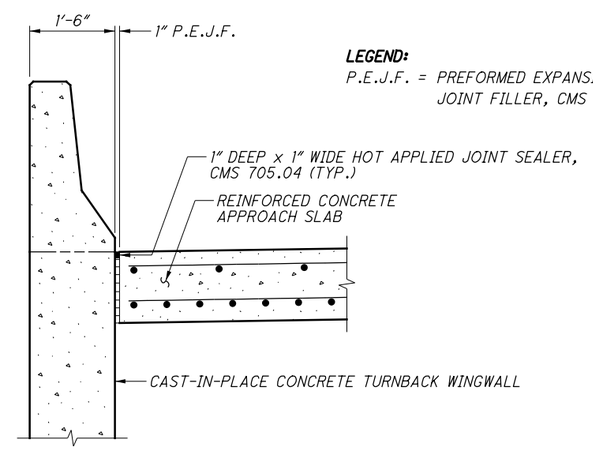

LEGEND:

P.E.J.F. = PREFORMED EXPANSION JOINT FILLER, CMS 705.03

SECTION B-B

JOINTED STRUCTURE WITH CAST-IN-PLACE CONCRETE TURNBACK WINGWALL

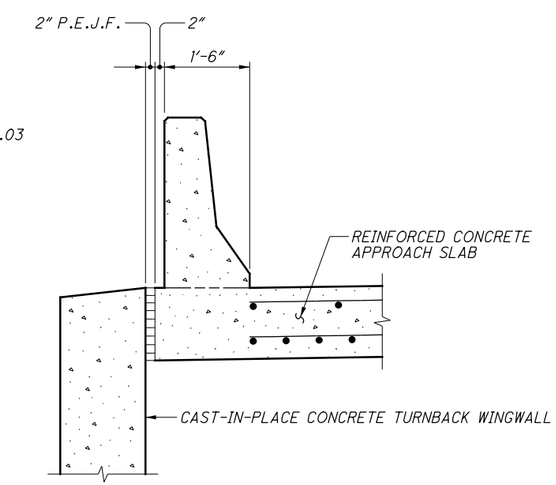

SECTION B-B

JOINTLESS STRUCTURE WITH CAST-IN-PLACE CONCRETE TURNBACK WINGWALL

DESIGN AGENCY
OFFICE OF STRUCTURAL ENGINEERING

STATE OF OHIO DEPARTMENT OF TRANSPORTATION
01-16-15
DATE
ADMINISTRATOR

REVISIONS
07-17-15
01-19-18

AS-2-15

STANDARD BRIDGE DRAWING
APPROACH SLAB INSTALLATION (TYPE A)

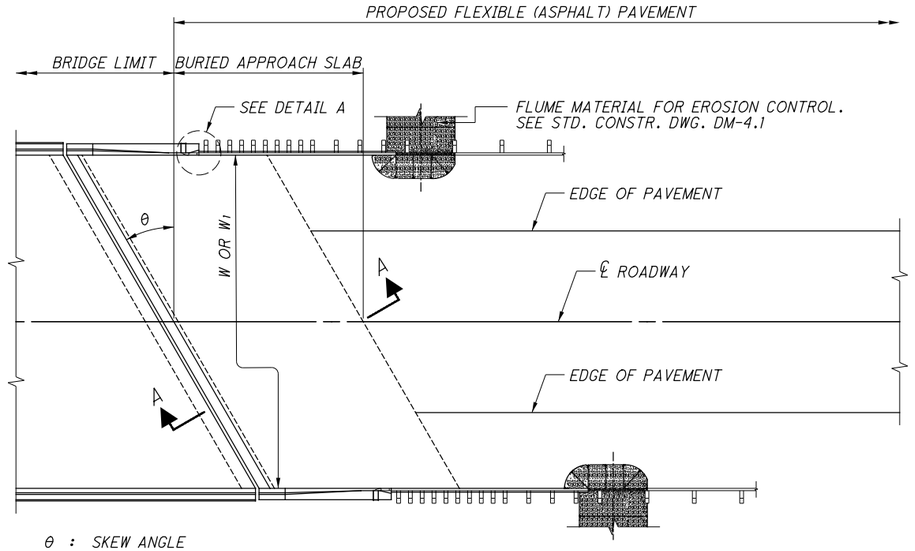

θ : SKEW ANGLE

W1 : APPROACH SLAB WIDTH (VARIES, SEE DETAIL A)

PLAN

JOINTED STRUCTURE WITH CAST-IN-PLACE CONCRETE TURNBACK WINGWALLS AND PROPOSED FLEXIBLE (ASPHALT) PAVEMENT

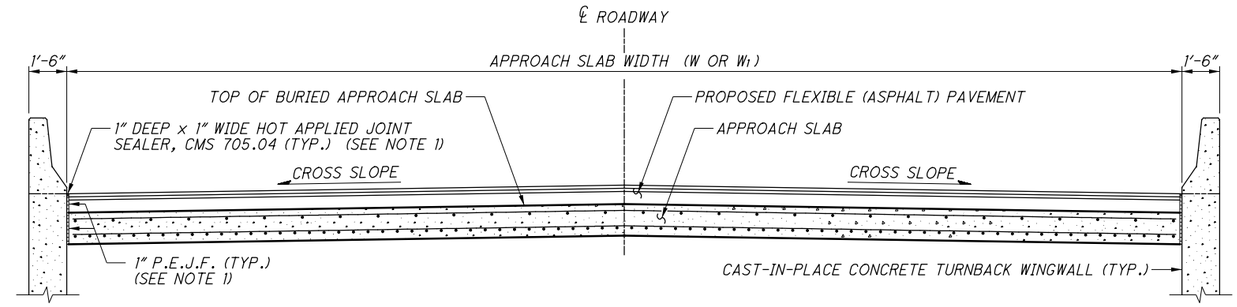

LEGEND:

P.E.J.F. = PREFORMED EXPANSION JOINT FILLER

ELEVATION

TAKEN PERPENDICULAR TO ℄ ROADWAY, LOOKING UP-STATION

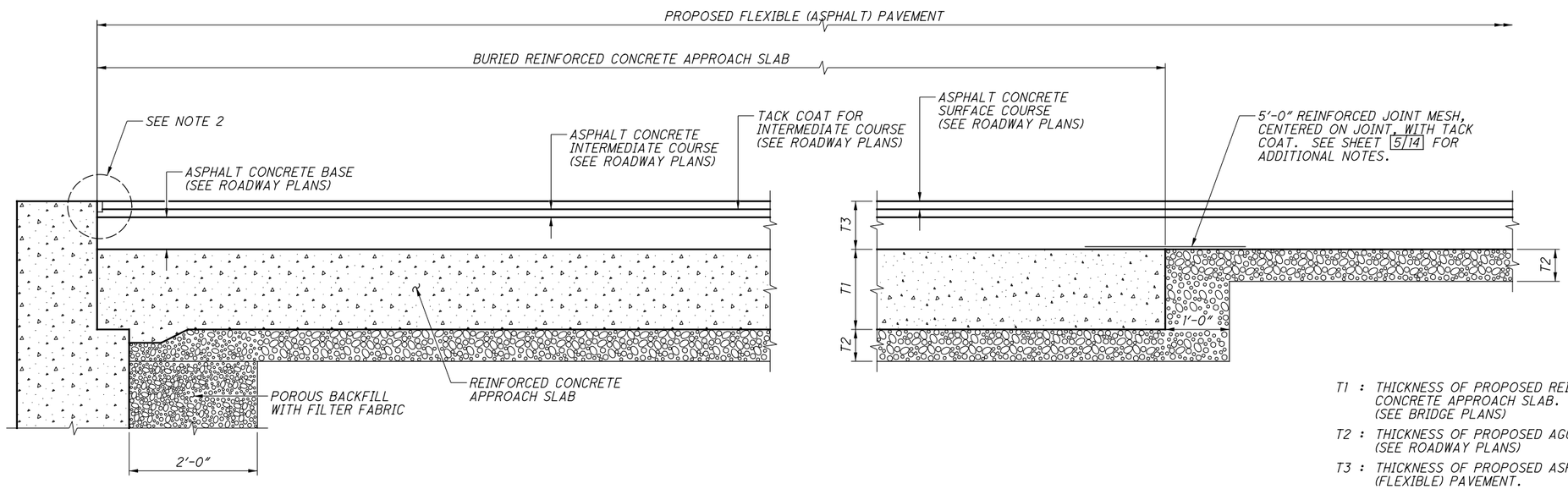

T1 : THICKNESS OF PROPOSED REINFORCED CONCRETE APPROACH SLAB. (SEE BRIDGE PLANS)

T2 : THICKNESS OF PROPOSED AGGREGATE BASE. (SEE ROADWAY PLANS)

T3 : THICKNESS OF PROPOSED ASPHALT (FLEXIBLE) PAVEMENT. (SEE ROADWAY PLANS)

SECTION A-A

JOINTED STRUCTURE WITH PROPOSED FLEXIBLE (ASPHALT) PAVEMENT
REINFORCING STEEL NOT SHOWN

NOTES:

1. 1" PREFORMED EXPANSION JOINT FILLER SHALL EXTEND UP BETWEEN CAST-IN-PLACE CONCRETE TURNBACK WINGWALLS AND THE SIDE FACES OF APPROACH SLAB AND PROPOSED FLEXIBLE (ASPHALT) PAVEMENT TO THE ELEVATION OF 1" BELOW THE FINAL SURFACE ELEVATION OF THE FLEXIBLE (ASPHALT) PAVEMENT. THEN, APPLY 1" DEEP x 1" WIDE HOT APPLIED JOINT SEALER AS PER CMS 705.04.
2. SEE STD. BRIDGE DWG. AS-1-15, SHEET 2/2, DETAIL C.
3. FOR DETAIL A AND ADDITIONAL NOTES, SEE SHEET 5/14.

DESIGN AGENCY
OFFICE OF STRUCTURAL ENGINEERING

STATE OF OHIO DEPARTMENT OF TRANSPORTATION
01-16-15
DATE
ADMINISTRATOR

REVISIONS
07-17-15
01-19-18

AS-2-15

STANDARD BRIDGE DRAWING
APPROACH SLAB INSTALLATION (TYPE B)

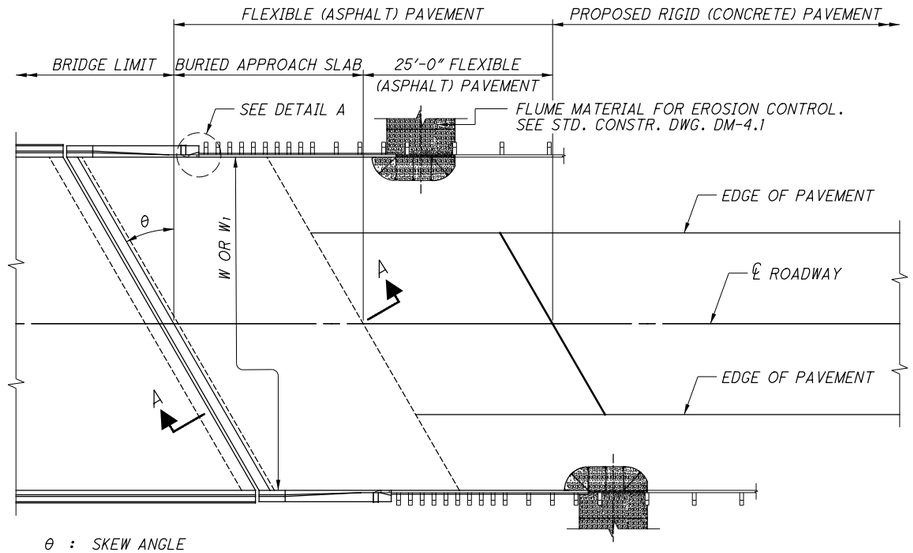

θ : SKEW ANGLE

W_1 : APPROACH SLAB WIDTH (VARIES, SEE DETAIL A)

PLAN

JOINTED STRUCTURE WITH CAST-IN-PLACE CONCRETE TURNBACK WINGWALLS AND PROPOSED RIGID (CONCRETE) PAVEMENT

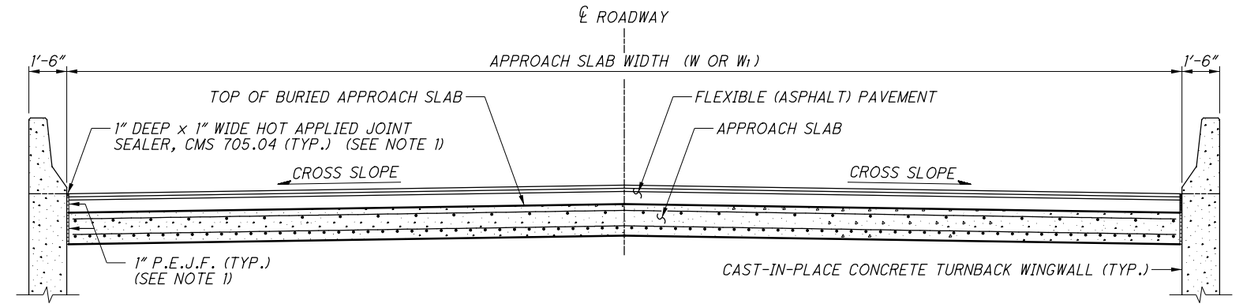

LEGEND:

P.E.J.F. = PREFORMED EXPANSION JOINT FILLER

ELEVATION

TAKEN PERPENDICULAR TO ℄ ROADWAY, LOOKING UP-STATION

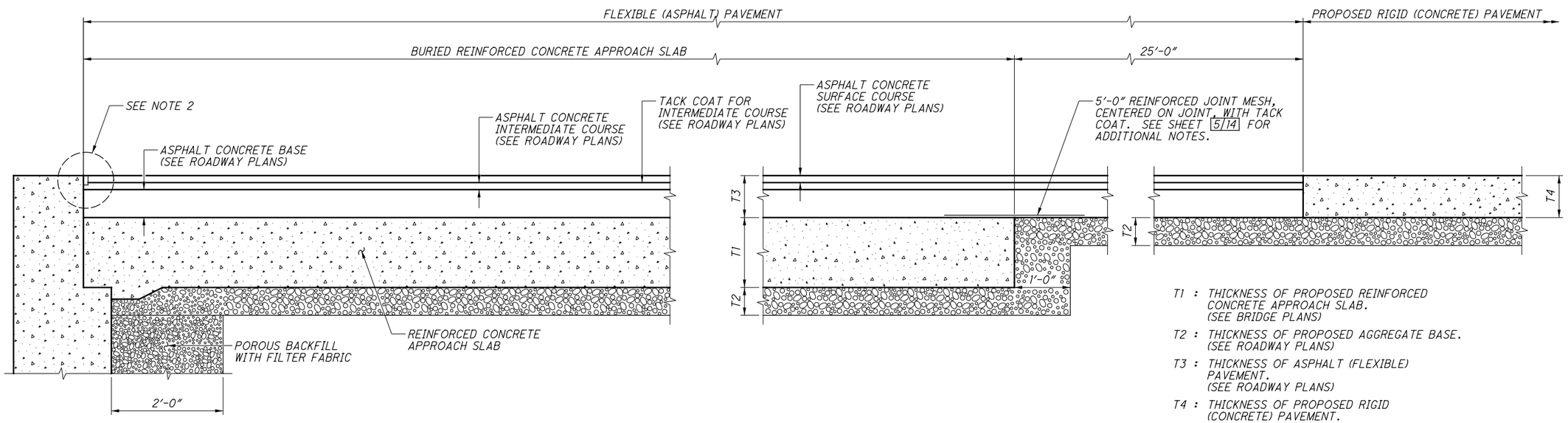

T1 : THICKNESS OF PROPOSED REINFORCED CONCRETE APPROACH SLAB. (SEE BRIDGE PLANS)

T2 : THICKNESS OF PROPOSED AGGREGATE BASE. (SEE ROADWAY PLANS)

T3 : THICKNESS OF ASPHALT (FLEXIBLE) PAVEMENT. (SEE ROADWAY PLANS)

T4 : THICKNESS OF PROPOSED RIGID (CONCRETE) PAVEMENT. (SEE ROADWAY PLANS)

SECTION A-A

JOINTED STRUCTURE WITH PROPOSED RIGID (CONCRETE) PAVEMENT
REINFORCING STEEL NOT SHOWN

NOTES:

1. 1" PREFORMED EXPANSION JOINT FILLER SHALL EXTEND UP BETWEEN CAST-IN-PLACE CONCRETE TURNBACK WINGWALLS AND THE SIDE FACES OF APPROACH SLAB AND PROPOSED FLEXIBLE (ASPHALT) PAVEMENT TO THE ELEVATION OF 1" BELOW THE FINAL SURFACE ELEVATION OF THE FLEXIBLE (ASPHALT) PAVEMENT. THEN, APPLY 1" DEEP x 1" WIDE HOT APPLIED JOINT SEALER AS PER CMS 705.04.
2. SEE STD. BRIDGE DWG. AS-1-15, SHEET 2/2, DETAIL C.
3. FOR DETAIL A AND ADDITIONAL NOTES, SEE SHEET 5/14.

DESIGN AGENCY
OFFICE OF STRUCTURAL ENGINEERING

STATE OF OHIO DEPARTMENT OF TRANSPORTATION
01-16-15
DATE
ADMINISTRATOR

REVISIONS
07-17-15
01-19-18

AS-2-15

STANDARD BRIDGE DRAWING
APPROACH SLAB INSTALLATION (TYPE B)

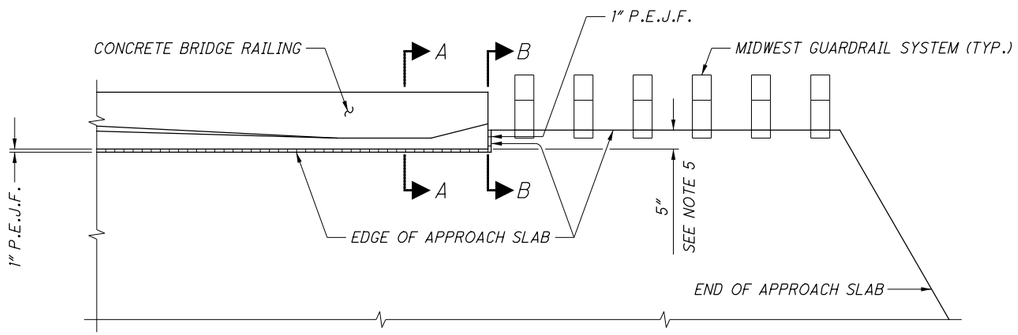

DETAIL A

OUTSIDE EDGE OF APPROACH SLAB AT THE END OF CONCRETE BRIDGE RAILING
(TYPE 4-B CONCRETE CURB ON APPROACH SLAB AND THRIE-BEAM RAIL NOT SHOWN)

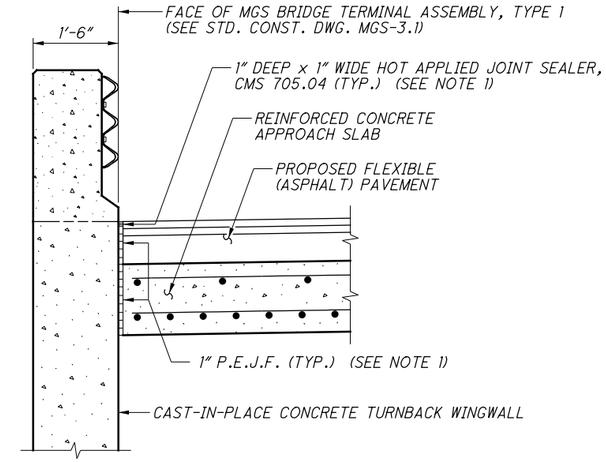

SECTION A-A

JOINTED STRUCTURE WITH CAST-IN-PLACE CONCRETE TURNBACK WINGWALL AND
PROPOSED FLEXIBLE (ASPHALT) PAVEMENT

REINFORCED JOINT MESH:

THIS ITEM SHALL BE USED TO REINFORCE THE TRANSVERSE JOINTS. PLACE REINFORCING MESH ON PROPOSED SURFACE AS SHOWN IN SECTION A-A, SHEETS 3/14 AND 4/14 , 5'-0" WIDE, ALONG THE LENGTHS SHOWN (MEASURED ALONG THE SKEW), AND CENTERED ON THE JOINT. APPLY A TACK COAT TO MAXIMIZE THE BOND BETWEEN THE TWO ADJOINING SURFACES. AFTER PLACEMENT OF THE REINFORCED JOINT MESH, PLACE THE ASPHALT CONCRETE AS SHOWN ON THE ROADWAY PLANS.

THE REINFORCED JOINT MESH MATERIAL SHALL BE GLASGRID 8512 OR MACGRID AR 20.7. THE REINFORCED JOINT MESH AND A TACK COAT SHALL BE PLACED IN ACCORDANCE WITH THE MANUFACTURER'S SPECIFICATIONS.

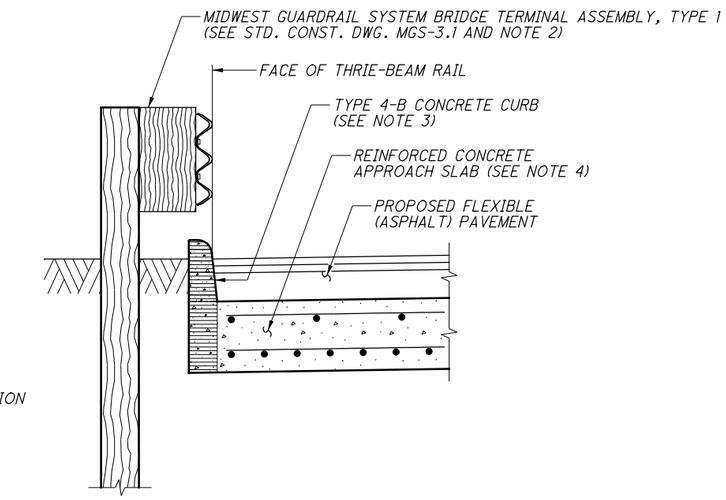

LEGEND:

P.E.J.F. = PREFORMED EXPANSION JOINT FILLER

= LIMIT OF 1" PREFORMED EXPANSION JOINT FILLER (SEE NOTE 5)

SECTION B-B

JOINTED STRUCTURE WITH CAST-IN-PLACE CONCRETE TURNBACK WINGWALL AND
PROPOSED FLEXIBLE (ASPHALT) PAVEMENT

NOTES:

1. 1" PREFORMED EXPANSION JOINT FILLER SHALL EXTEND UP BETWEEN CAST-IN-PLACE CONCRETE TURNBACK WINGWALLS AND THE SIDE FACES OF APPROACH SLAB AND PROPOSED FLEXIBLE (ASPHALT) PAVEMENT TO THE ELEVATION OF 1" BELOW THE FINAL SURFACE ELEVATION OF THE FLEXIBLE (ASPHALT) PAVEMENT. THEN, APPLY 1" DEEP x 1" WIDE HOT APPLIED JOINT SEALER AS PER CMS 705.04.
2. FOR MIDWEST GUARDRAIL SYSTEM, BRIDGE TERMINAL ASSEMBLY, TYPE 1, SEE STD. CONST. DWG. MGS-3.1. FOR MGS BRIDGE TERMINAL ASSEMBLY, TYPE 2, SEE STD. CONST. DWG. MGS-3.2.
3. FOR TYPE 4-B CONCRETE CURB, SEE STD. CONST. DWG. BP-5.1.
4. FOR APPROACH SLAB REINFORCING STEEL AND ADDITIONAL DETAILS, SEE STD. BRIDGE DWG. AS-1-15.
5. PROVIDE 1" PREFORMED EXPANSION JOINT FILLER AT THE INTERFACE BETWEEN END OF CONCRETE BRIDGE RAILING AND TYPE 4-B CONCRETE CURB.
6. FOR GENERAL NOTES, SEE SHEET 14/14.

DESIGN AGENCY
OFFICE OF STRUCTURAL ENGINEERING

STATE OF OHIO DEPARTMENT OF TRANSPORTATION
01-16-15
DATE
ADMINISTRATOR

REVISIONS
07-17-15
01-19-18

AS-2-15

STANDARD BRIDGE DRAWING
APPROACH SLAB INSTALLATION (TYPE B)

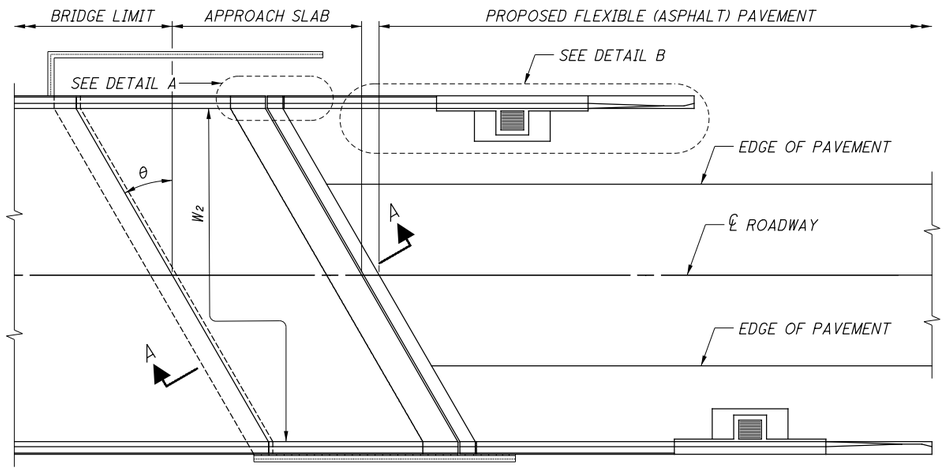

θ : SKEW ANGLE

W_2 : APPROACH SLAB WIDTH (TOE-TO-TOE CONCRETE BRIDGE RAILING)

PLAN

JOINTLESS SUPERSTRUCTURE WITH MSE WALLS AND PROPOSED FLEXIBLE (ASPHALT) PAVEMENT
JOINTED SUPERSTRUCTURE SIMILAR

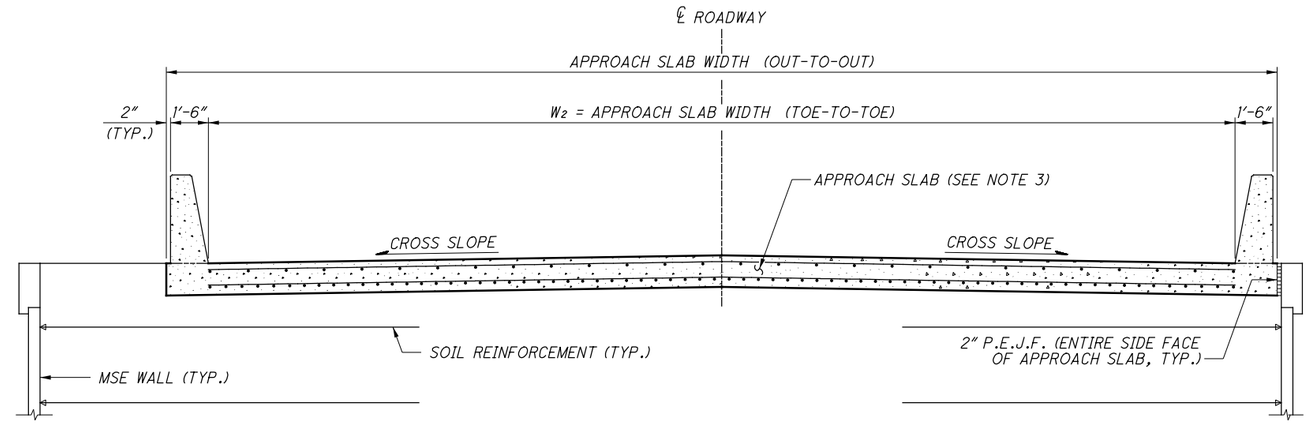

LEGEND:
P.E.J.F. = PREFORMED EXPANSION JOINT FILLER

ELEVATION

TAKEN PERPENDICULAR TO ℄ ROADWAY, LOOKING UP-STATION

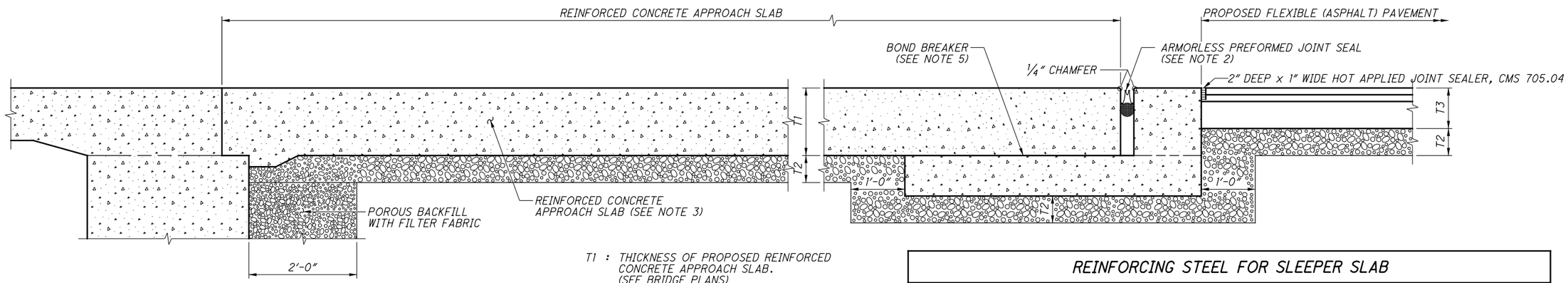

T1 : THICKNESS OF PROPOSED REINFORCED CONCRETE APPROACH SLAB. (SEE BRIDGE PLANS)

T2 : THICKNESS OF PROPOSED AGGREGATE BASE. (SEE ROADWAY PLANS)

T3 : THICKNESS OF PROPOSED ASPHALT (FLEXIBLE) PAVEMENT. (SEE ROADWAY PLANS)

SECTION A-A

REINFORCING STEEL NOT SHOWN

REINFORCING STEEL FOR SLEEPER SLAB

MARK	LENGTH	TYPE
SS501 ◪	A	STR
SS502	B	STR
SS503	2C + 14″ + D	BENT
SS504 ◪	3′-9″	BENT

BENDING DIAGRAMS

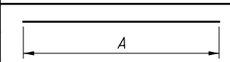

SS501

W_2 : APPROACH SLAB WIDTH (TOE-TO-TOE)

θ : SKEW ANGLE

$A : \frac{W_2 - 0.25'}{\cos\theta}$

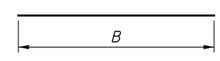

SS502

θ : SKEW ANGLE

$B : \frac{5.5'}{\cos\theta}$

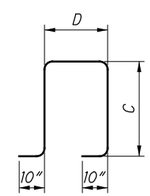

SS503

T1 : THICKNESS OF PROPOSED REINFORCED CONCRETE APPROACH SLAB

C : T1 + 4″

$D : \frac{16''}{\cos\theta}$

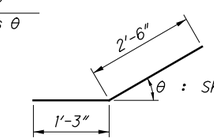

θ : SKEW ANGLE

SS504
(FIELD BENT IS ALLOWED)

◪ SEE NOTE 4.

NOTES:

1. FOR DETAIL A, DETAIL B, AND ADDITIONAL NOTES, SEE SHEET 7/14.
2. FOR ARMORLESS PREFORMED JOINT SEAL OPENING TABLE SEE SHEET 7/14. FORM JOINT OPENING USING REMOVABLE FORM.
3. FOR APPROACH SLAB REINFORCING STEEL AND ADDITIONAL DETAILS, SEE STD. BRIDGE DWG. AS-1-15.
4. IF THE SKEW ANGLE IS 0°, INCREASE THE LENGTH OF SS501 REBARS SO THAT THE THE TOTAL LENGTH OF SS501 REBARS SHALL BE THE APPROACH SLAB WIDTH (OUT-TO-OUT) MINUS 6″ AND OMIT SS504 SPLICE REBARS. SEE DETAIL A ON SHEET 7/14.
5. APPLY BOND BREAKER TO THE ENTIRE TOP SURFACE OF THE CONCRETE SLEEPER SLAB. SEE "REINFORCED CONCRETE SLEEPER SLAB SURFACE FINISH AND BOND BREAKER" NOTE ON SHEET 14/14.
6. FOR GENERAL NOTES, SEE SHEET 14/14.

DESIGN AGENCY
OFFICE OF STRUCTURAL ENGINEERING

STATE OF OHIO DEPARTMENT OF TRANSPORTATION
01-16-15
DATE
ADMINISTRATOR

REVISIONS
07-17-15
01-19-18

AS-2-15

STANDARD BRIDGE DRAWING
APPROACH SLAB INSTALLATION (TYPE C)

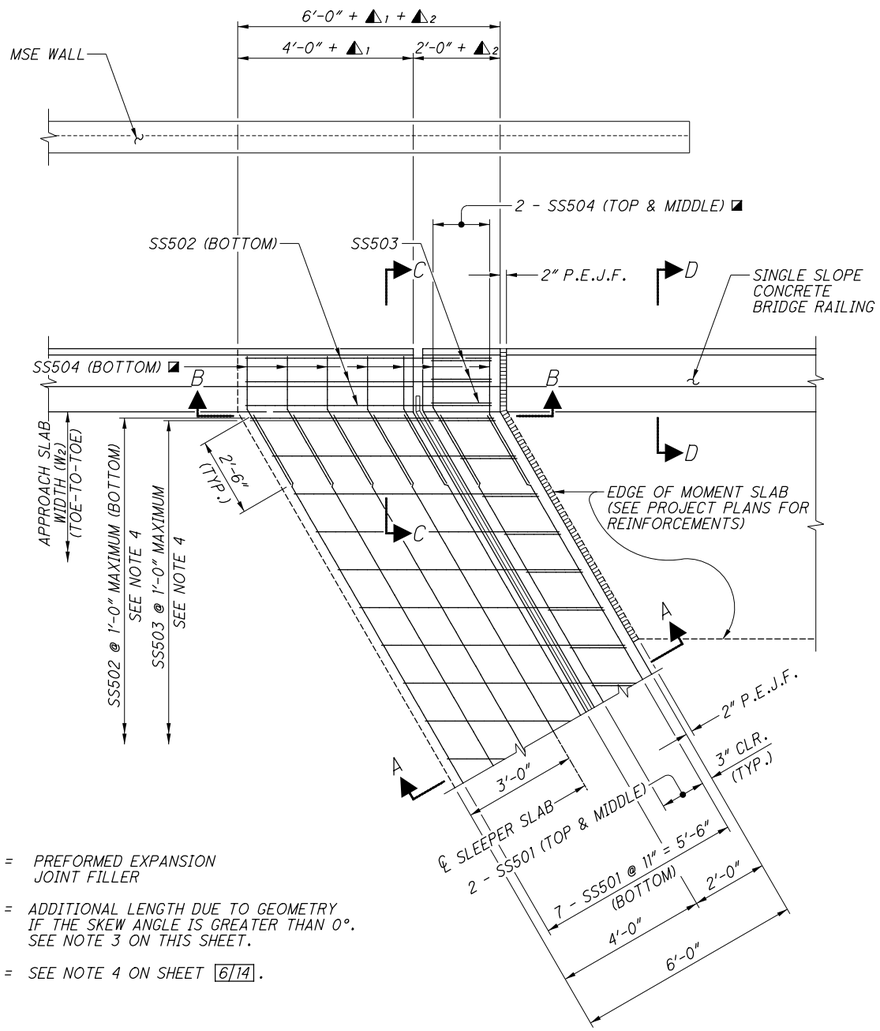

LEGEND:

P.E.J.F. = PREFORMED EXPANSION JOINT FILLER

◭1, ◭2 = ADDITIONAL LENGTH DUE TO GEOMETRY IF THE SKEW ANGLE IS GREATER THAN 0°. SEE NOTE 3 ON THIS SHEET.

◪ = SEE NOTE 4 ON SHEET 6/14.

DETAIL A

JOINTLESS SUPERSTRUCTURE WITH MSE WALLS AND PROPOSED FLEXIBLE (ASPHALT) PAVEMENT
JOINTED SUPERSTRUCTURE SIMILAR

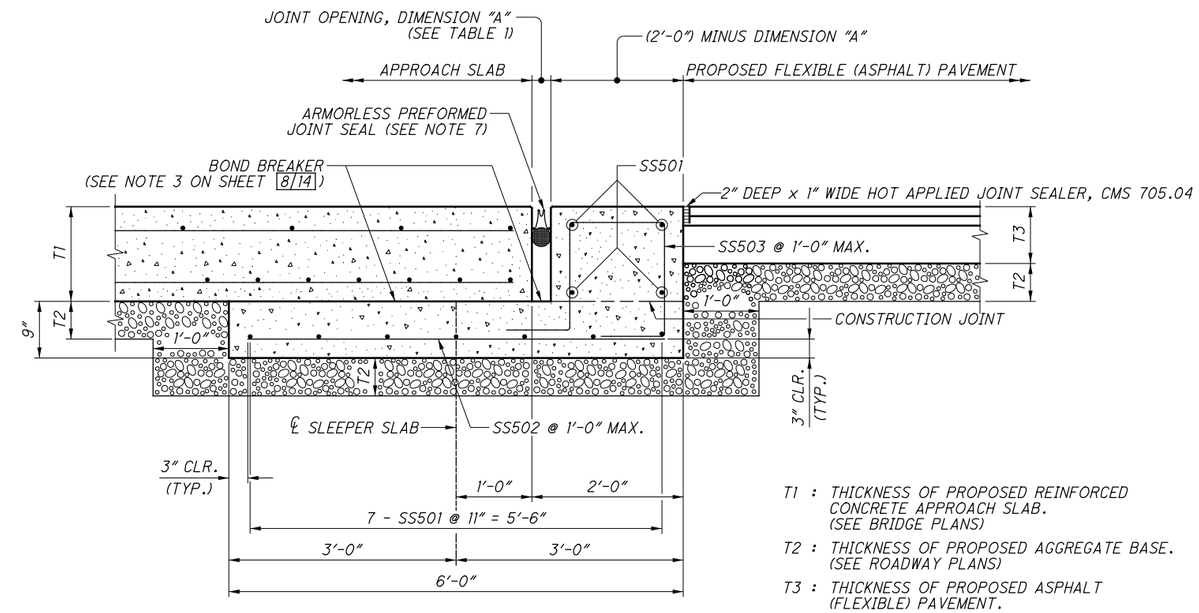

T1 : THICKNESS OF PROPOSED REINFORCED CONCRETE APPROACH SLAB. (SEE BRIDGE PLANS)

T2 : THICKNESS OF PROPOSED AGGREGATE BASE. (SEE ROADWAY PLANS)

T3 : THICKNESS OF PROPOSED ASPHALT (FLEXIBLE) PAVEMENT. (SEE ROADWAY PLANS)

SECTION A-A

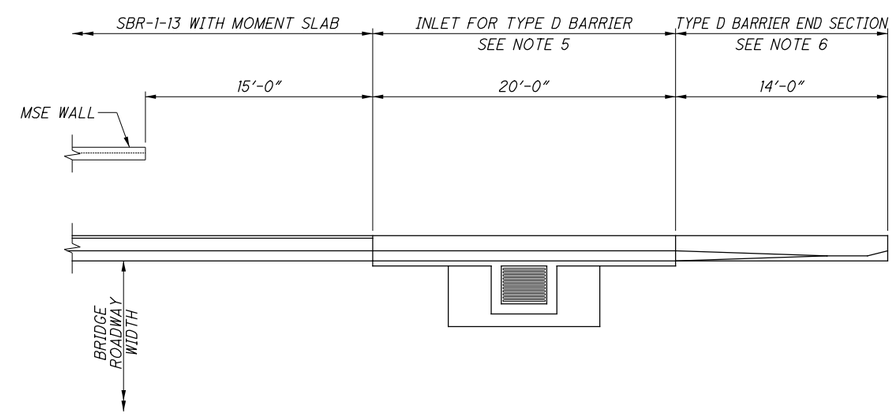

DETAIL B

SUPERSTRUCTURE WITH MSE WALLS AND PROPOSED FLEXIBLE (ASPHALT) PAVEMENT

NOTES:

1. FOR LOCATION OF DETAIL A, DETAIL B, AND REINFORCING STEEL LIST, SEE SHEET 6/14.
2. FOR SECTIONS B-B, C-C, D-D, AND ADDITIONAL NOTES, SEE SHEET 8/14.
3. IF THE SKEW ANGLE IS 0°, ◭1 AND ◭2 EQUAL TO ZERO.
4. REBARS SS502 AND SS503 SHALL BE PLACED PARALLEL TO CENTERLINE OF ROADWAY. THE SPACINGS SHALL BE MEASURED PERPENDICULAR TO CENTERLINE OF ROADWAY.
5. SEE STD. CONSTR. DWG. I-2.3 FOR INLET NO. 3 AND STD. CONSTR. DWG. RM-4.5 FOR SINGLE SLOPE BARRIER, TYPE D.
6. SEE STD. CONSTR. DWG. RM-4.6 FOR TYPE D BARRIER END SECTION.
7. FOR ARMORLESS PREFORMED JOINT SEAL NOTE, SEE SHEET 8/14. FORM JOINT OPENING USING REMOVABLE FORM.

TABLE 1 - EXPANSION JOINT OPENING

TEMPERATURE (°F)	JOINT OPENING, DIMENSION "A"
30°	3 3/8"
40°	3 1/8"
50°	2 7/8"
60°	2 5/8"
70°	2 5/16"
80°	2 1/16"
90°	1 13/16"

DESIGN AGENCY
OFFICE OF STRUCTURAL ENGINEERING

STATE OF OHIO DEPARTMENT OF TRANSPORTATION
ADMINISTRATOR
DATE 01-16-15

REVISIONS
07-17-15
01-19-18

AS-2-15

STANDARD BRIDGE DRAWING
APPROACH SLAB INSTALLATION (TYPE C)

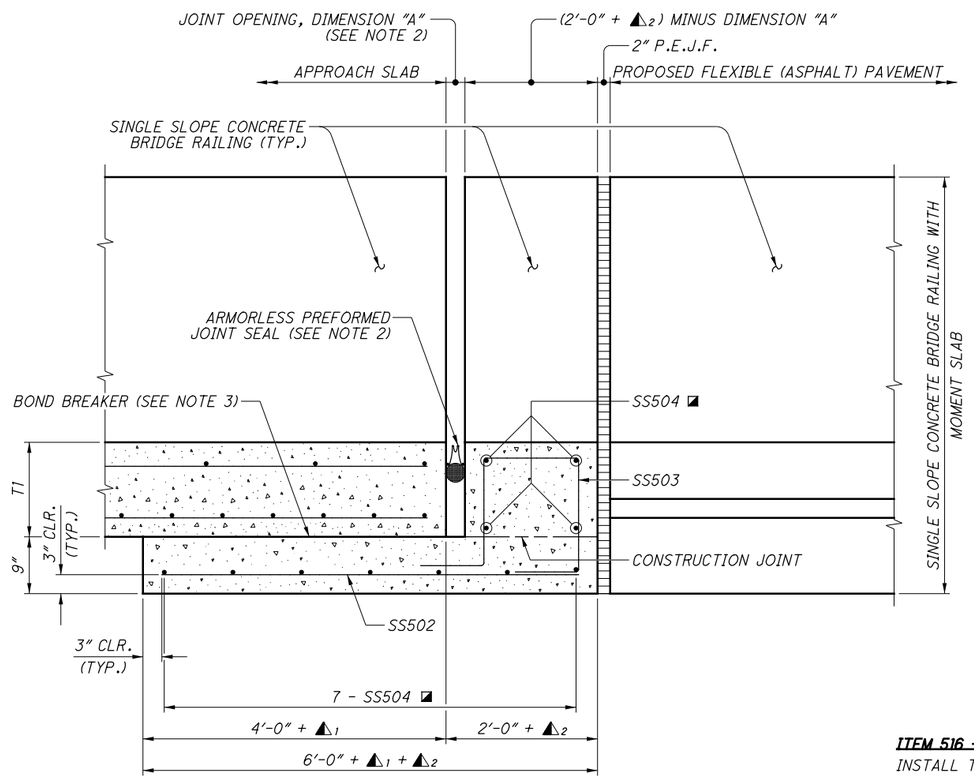

SECTION B-B

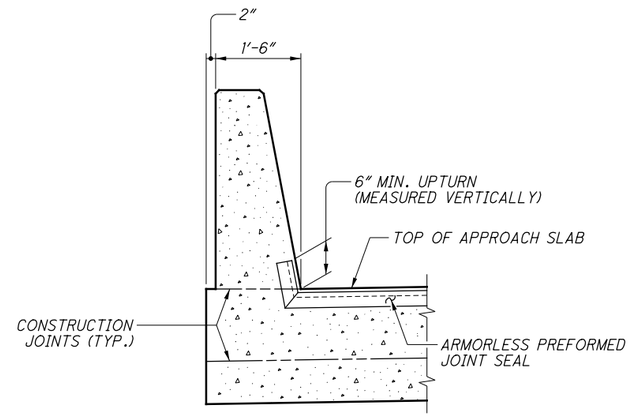

SECTION C-C

REINFORCING STEEL AND MSE WALL NOT SHOWN

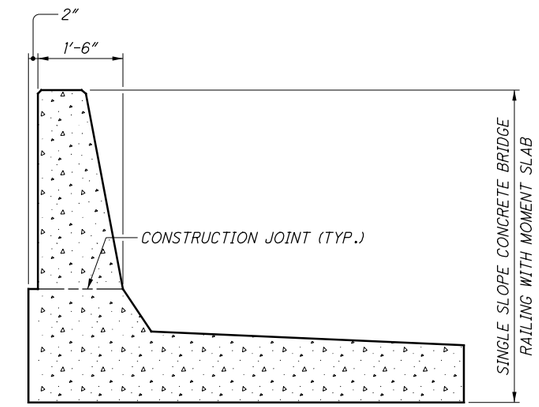

SECTION D-D

REINFORCING STEEL AND MSE WALL NOT SHOWN
SEE PROJECT PLANS FOR MOMENT SLAB DETAILS

LEGEND:

P.E.J.F. = PREFORMED EXPANSION JOINT FILLER

T1 = THICKNESS OF PROPOSED REINFORCED CONCRETE APPROACH SLAB. (SEE BRIDGE PLANS)

△1, △2 = ADDITIONAL LENGTH DUE TO GEOMETRY IF THE SKEW ANGLE IS GREATER THAN 0°. SEE NOTE 4 ON THIS SHEET.

◪ = SEE NOTE 4 ON SHEET 6/14.

NOTES:

1. FOR LOCATION OF SECTIONS B-B, C-C, AND D-D, SEE SHEET 7/14.
2. FOR ARMORLESS PREFORMED JOINT SEAL OPENING TABLE SEE SHEET 7/14. FORM JOINT OPENING USING REMOVABLE FORM.
3. APPLY BOND BREAKER TO THE ENTIRE TOP SURFACE OF THE CONCRETE SLEEPER SLAB. SEE "REINFORCED CONCRETE SLEEPER SLAB SURFACE FINISH AND BOND BREAKER" NOTE ON SHEET 14/14.
4. IF THE SKEW ANGLE IS 0°, △1 AND △2 EQUAL TO ZERO.

ITEM 516 - ARMORLESS PREFORMED JOINT SEAL:

INSTALL THE ARMORLESS PREFORMED JOINT SEAL IN ACCORDANCE WITH THE MANUFACTURER'S SPECIFICATIONS AND UNDER THE SUPERVISION OF THE MANUFACTURER'S DESIGNATED REPRESENTATIVE.

SELECT THE ARMORLESS PREFORMED JOINT SEAL FROM ONE OF THE MANUFACTURERS LISTED BELOW:

R.J. WATSON, INC.
11035 WALDEN AVENUE
ALDEN, NY 14004-9616
PHONE: (716) 901-7020
FAX: (716) 901-7015
- SILICOFLEX SF400 (MAX. MOVEMENT RATING: 4")

WATSON BOWMAN ACME CORP.
95 PINEVIEW DRIVE
AMHERST, NY 14228-2121
PHONE: (716) 691-7566
FAX: (716) 691-9239
- WABO SPS-400 (MAX. MOVEMENT RATING: 4")

D.S. BROWN COMPANY
300 EAST CHERRY STREET
NORTH BALTIMORE, OH 45872-1227
PHONE: (419) 257-3561
FAX: (419) 257-2200
- V-400 (MAX. MOVEMENT RATING: 4")

THE SEAL AND ADHESIVE ARE AN INTEGRAL JOINT SYSTEM THAT SHALL BE DESIGNED AND SUPPLIED BY THE SAME MANUFACTURER.

ITEM 516 - ARMORLESS PREFORMED JOINT SEAL (CONT.):

SET THE TOP OF THE JOINT SEAL AT LEAST ¾" BELOW THE ROADWAY SURFACE. AT THE CONCRETE BRIDGE RAILING, RECESS THE JOINT SEAL ½" BEHIND THE FACE OF CONCRETE BRIDGE RAILING AND FOLLOW THE SLOPE OF THE CONCRETE BRIDGE RAILING FOR A MINIMUM OF 6" UPTURN MEASURED VERTICALLY FROM THE TOE OF THE CONCRETE BRIDGE RAILING AS SHOWN IN SECTION C-C ON THIS SHEET. AT THE CONCRETE CURB (SEE SECTION D-D, SHEET 11/14), THERE IS NO MINIMUM RECESSED DIMENSION. HOWEVER, THE JOINT SEAL SHALL NOT PROTRUDE FROM THE FACE OF THE CONCRETE CURB AND IT SHALL BE TURNED UP TO WITHIN 1" FROM THE TOP OF THE CONCRETE CURB.

CONTINUALLY CHECK AND ADJUST THE DEPTH OF THE JOINT SEAL BY HAND AS NECESSARY BECAUSE WHEN THE JOINT SEAL OPENING CLOSES, THE JOINT SEAL WILL HAVE THE TENDENCY TO RISE. THEREFORE, AT THE JOINT SEAL'S MINIMUM WIDTH, THE TOP OF THE JOINT SEAL SHALL STILL BE AT LEAST ½" BELOW THE ROADWAY SURFACE.

SUBMIT THE JOINT SEAL INSTALLATION PROCEDURES TO THE ENGINEER AT LEAST SEVEN (7) DAYS BEFORE CONSTRUCTION BEGINS. THE DEPARTMENT'S ACCEPTANCE IS NOT REQUIRED.

THE DEPARTMENT WILL MEASURE THE ARMORLESS PREFORMED JOINT SEAL BY THE NUMBER OF FEET HORIZONTALLY ALONG THE JOINT CENTERLINE.

THE DEPARTMENT WILL INCLUDE ALL MATERIALS, LABOR, EQUIPMENT, SURFACE PREPARATIONS, TOOLS, TRAFFIC CONTROL, AND INCIDENTALS NEEDED TO COMPLETE THE WORK DESCRIBED ABOVE IN THE CONTRACT PRICE FOR ITEM 516 - ARMORLESS PREFORMED JOINT SEAL.

DESIGN AGENCY
OFFICE OF STRUCTURAL ENGINEERING

STATE OF OHIO DEPARTMENT OF TRANSPORTATION
01-16-15
DATE
ADMINISTRATOR

REVISIONS
07-17-15
01-19-18

AS-2-15

STANDARD BRIDGE DRAWING
APPROACH SLAB INSTALLATION (TYPE C)

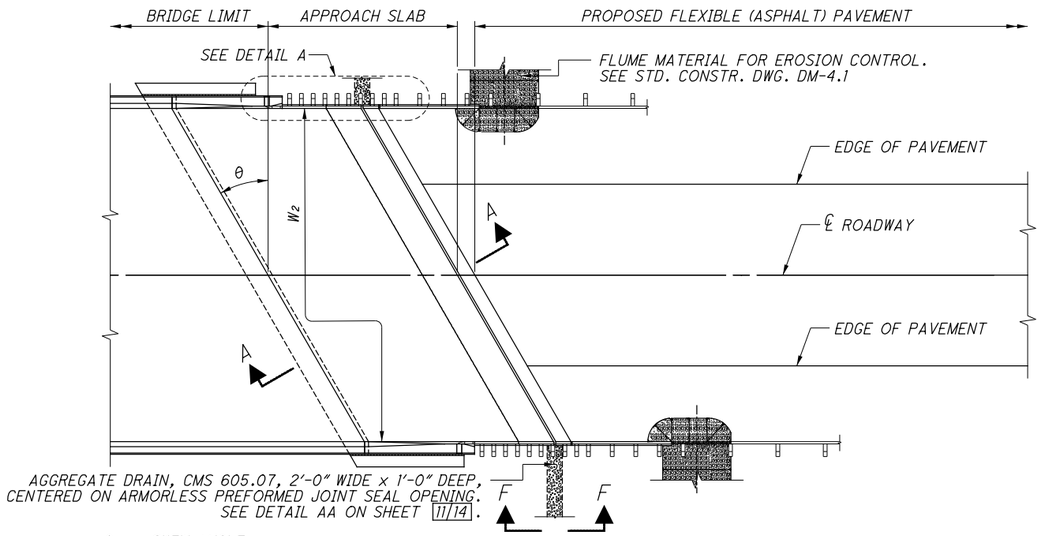

θ : SKEW ANGLE

W_2 : APPROACH SLAB WIDTH (TOE-TO-TOE CONCRETE BRIDGE RAILING/CONCRETE CURB)

PLAN

JOINTLESS SUPERSTRUCTURE WITH CAST-IN-PLACE CONCRETE TURNBACK WINGWALLS AND PROPOSED FLEXIBLE (ASPHALT) PAVEMENT

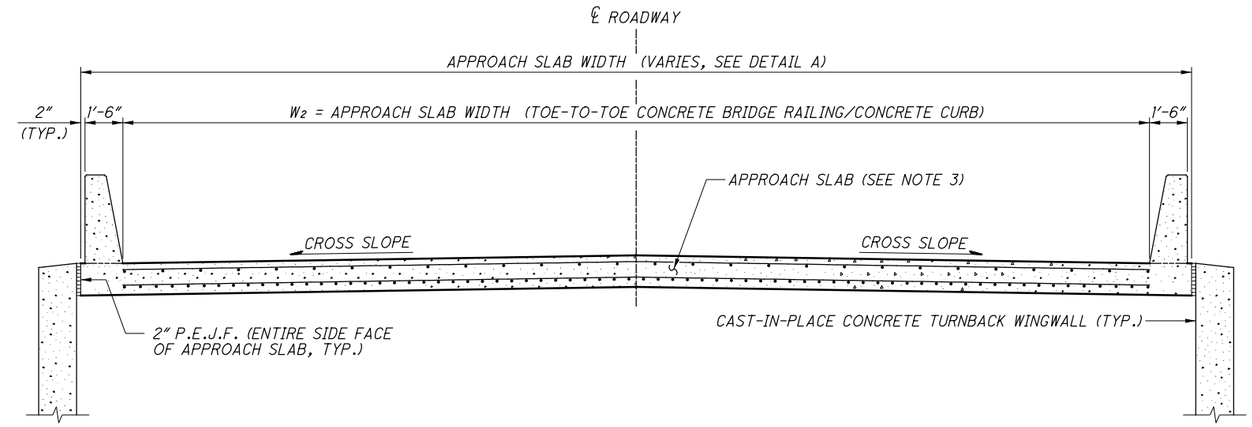

LEGEND:

P.E.J.F. = PREFORMED EXPANSION JOINT FILLER

ELEVATION

TAKEN PERPENDICULAR TO ℄ ROADWAY, LOOKING UP-STATION

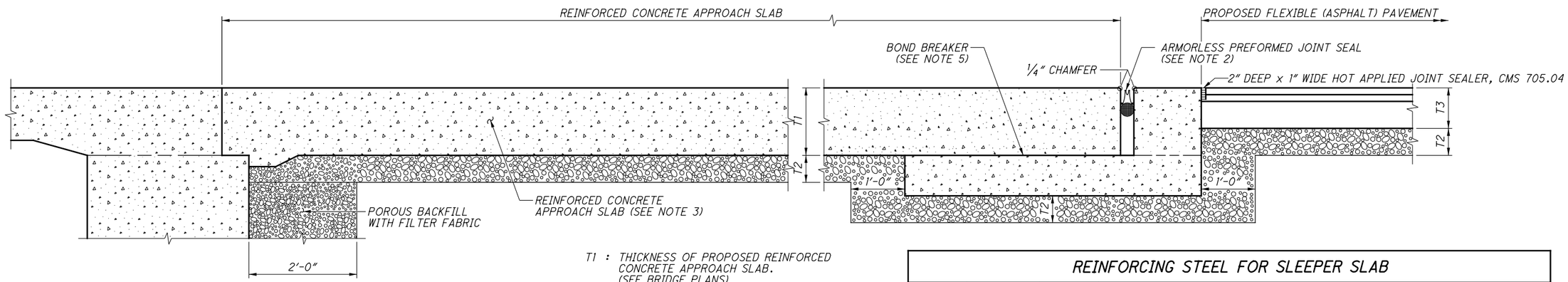

T1 : THICKNESS OF PROPOSED REINFORCED CONCRETE APPROACH SLAB. (SEE BRIDGE PLANS)

T2 : THICKNESS OF PROPOSED AGGREGATE BASE. (SEE ROADWAY PLANS)

T3 : THICKNESS OF PROPOSED ASPHALT (FLEXIBLE) PAVEMENT. (SEE ROADWAY PLANS)

SECTION A-A

REINFORCING STEEL NOT SHOWN

REINFORCING STEEL FOR SLEEPER SLAB

MARK	LENGTH	TYPE	BENDING DIAGRAMS
SS501 ◪	A	STR	A — SS501
SS502	B	STR	B — SS502
SS503	2C + 14" + D	BENT	D, C, 10", 10" — SS503

W_2 : APPROACH SLAB WIDTH (TOE-TO-TOE)

θ : SKEW ANGLE

$A : \frac{W_2 + 0.50'}{\cos\theta}$

θ : SKEW ANGLE

$B : \frac{5.5'}{\cos\theta}$

T1 : THICKNESS OF PROPOSED REINFORCED CONCRETE APPROACH SLAB

C : T1 + 4"

$D : \frac{16''}{\cos\theta}$

◪ FIELD BENT REBARS AS NECESSARY. ALSO, SEE NOTE 4.

NOTES:

1. FOR DETAIL A AND ADDITIONAL NOTES, SEE SHEET 10/14.
2. FOR ARMORLESS PREFORMED JOINT SEAL OPENING TABLE SEE SHEET 7/14. FORM JOINT OPENING USING REMOVABLE FORM.
3. FOR APPROACH SLAB REINFORCING STEEL AND ADDITIONAL DETAILS, SEE STD. BRIDGE DWG. AS-1-15.
4. IF THE SKEW ANGLE IS 0°, THE LENGTH OF SS501 REBARS SHALL BE THE APPROACH SLAB WIDTH "W2" (TOE-TO-TOE) PLUS 6". SEE DETAIL A AND NOTE 3 ON SHEET 10/14.
5. APPLY BOND BREAKER TO THE ENTIRE TOP SURFACE OF THE CONCRETE SLEEPER SLAB. SEE "REINFORCED CONCRETE SLEEPER SLAB SURFACE FINISH AND BOND BREAKER" NOTE ON SHEET 14/14.
6. FOR GENERAL NOTES, SEE SHEET 14/14.
7. SEE SECTION F-F ON SHEET 11/14.

DESIGN AGENCY
OFFICE OF STRUCTURAL ENGINEERING

STATE OF OHIO DEPARTMENT OF TRANSPORTATION
01-16-15
DATE
ADMINISTRATOR

REVISIONS
07-17-15
01-19-18

AS-2-15

STANDARD BRIDGE DRAWING
APPROACH SLAB INSTALLATION (TYPE C)

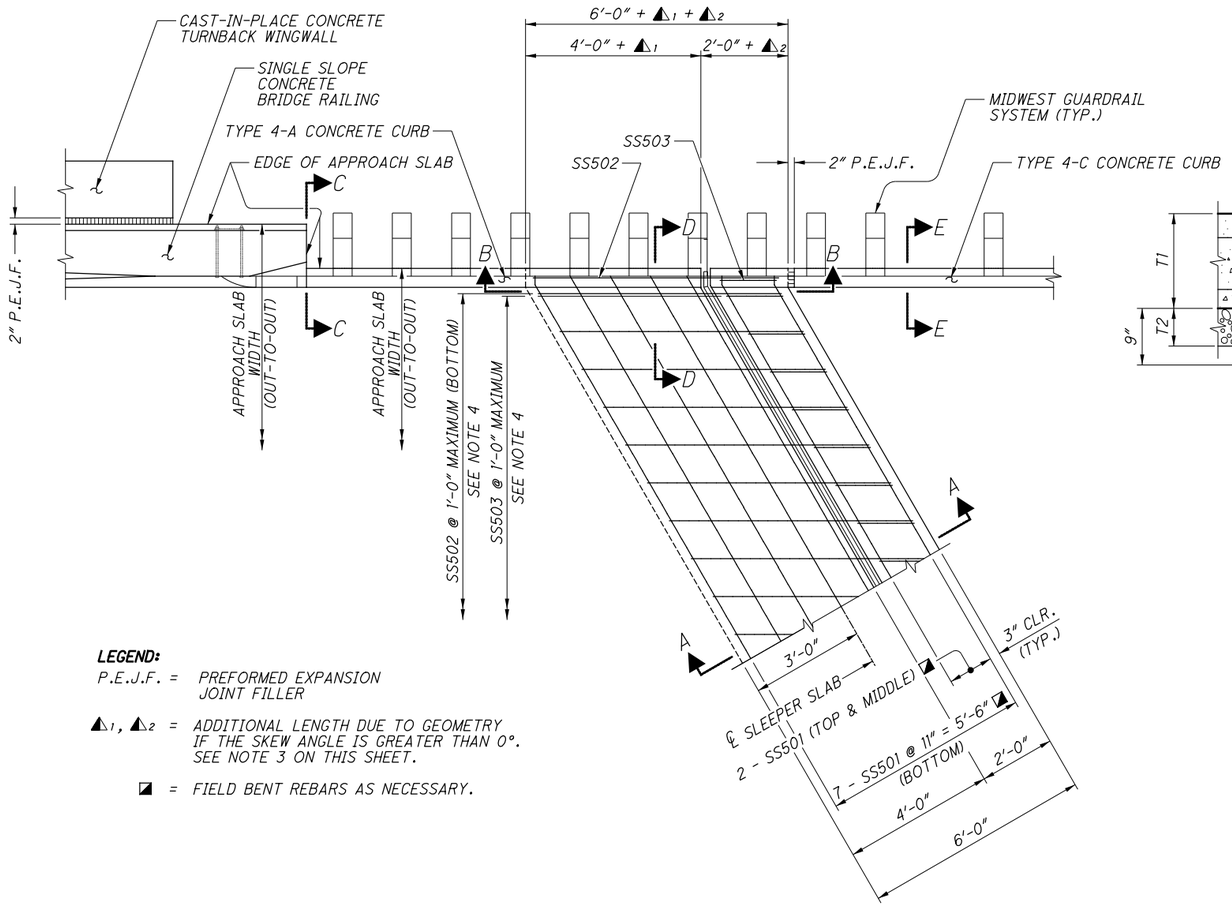

LEGEND:

P.E.J.F. = PREFORMED EXPANSION JOINT FILLER

△1, △2 = ADDITIONAL LENGTH DUE TO GEOMETRY IF THE SKEW ANGLE IS GREATER THAN 0°. SEE NOTE 3 ON THIS SHEET.

◪ = FIELD BENT REBARS AS NECESSARY.

DETAIL A

JOINTLESS SUPERSTRUCTURE WITH CAST-IN-PLACE CONCRETE TURNBACK WINGWALLS AND PROPOSED FLEXIBLE (ASPHALT) PAVEMENT

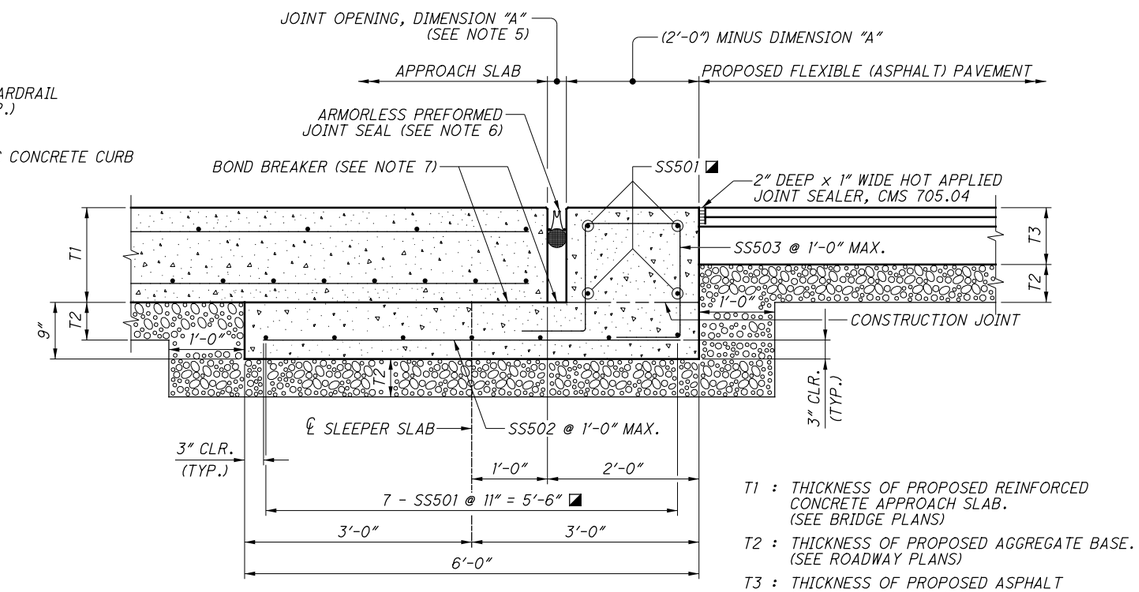

T1 : THICKNESS OF PROPOSED REINFORCED CONCRETE APPROACH SLAB. (SEE BRIDGE PLANS)

T2 : THICKNESS OF PROPOSED AGGREGATE BASE. (SEE ROADWAY PLANS)

T3 : THICKNESS OF PROPOSED ASPHALT (FLEXIBLE) PAVEMENT. (SEE ROADWAY PLANS)

SECTION A-A

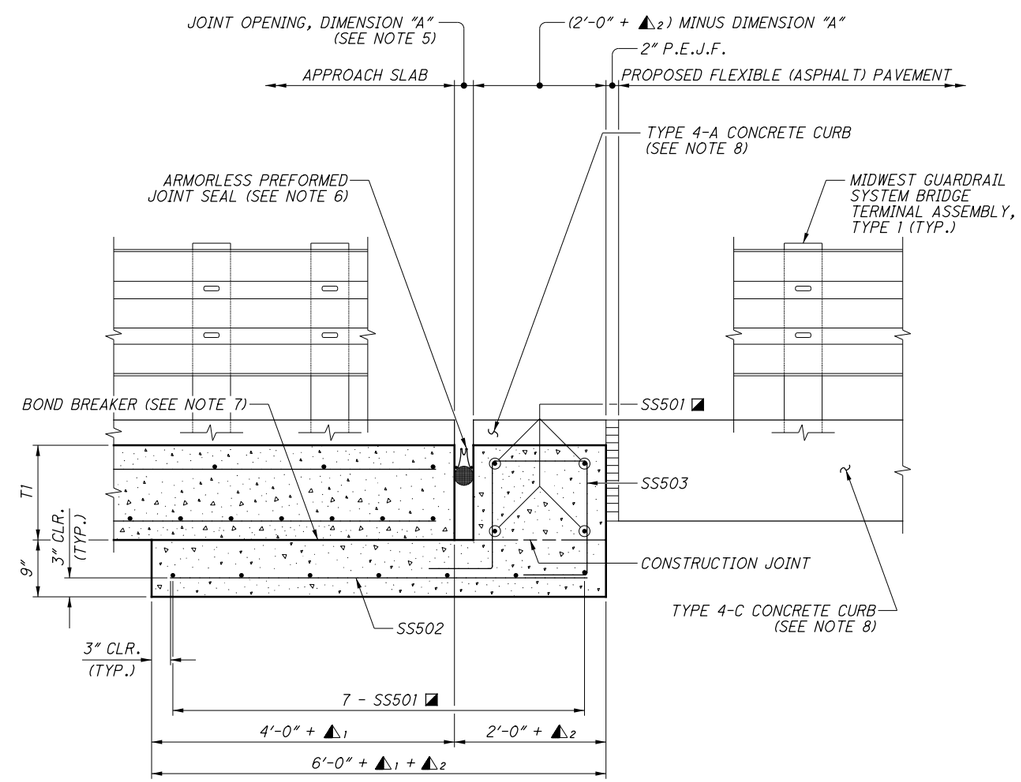

SECTION B-B

NOTES:

1. FOR LOCATION OF DETAIL A AND REINFORCING STEEL LIST, SEE SHEET 9/14.
2. FOR SECTIONS C-C, D-D, E-E, AND ADDITIONAL NOTES, SEE SHEET 11/14.
3. IF THE SKEW ANGLE IS 0°, △1 AND △2 EQUAL TO ZERO.
4. REBARS SS502 AND SS503 SHALL BE PLACED PARALLEL TO CENTERLINE OF ROADWAY. THE SPACINGS SHALL BE MEASURED PERPENDICULAR TO CENTERLINE OF ROADWAY.
5. FOR ARMORLESS PREFORMED JOINT SEAL OPENING TABLE SEE SHEET 7/14. FORM JOINT OPENING USING REMOVABLE FORM.
6. FOR ARMORLESS PREFORMED JOINT SEAL NOTE, SEE SHEET 8/14.
7. APPLY BOND BREAKER TO THE ENTIRE TOP SURFACE OF THE CONCRETE SLEEPER SLAB. SEE "REINFORCED CONCRETE SLEEPER SLAB SURFACE FINISH AND BOND BREAKER" NOTE ON SHEET 14/14.
8. FOR TYPE 4-A CONCRETE CURB AND TYPE 4-C CONCRETE CURB, SEE STD. CONST. DWG. BP-5.1.

DESIGN AGENCY
OFFICE OF STRUCTURAL ENGINEERING

STATE OF OHIO DEPARTMENT OF TRANSPORTATION
01-16-15
DATE
ADMINISTRATOR

REVISIONS
07-17-15
01-19-18

AS-2-15

STANDARD BRIDGE DRAWING
APPROACH SLAB INSTALLATION (TYPE C)

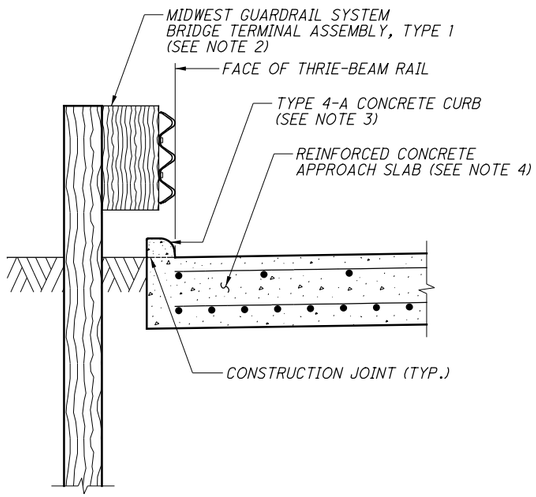

SECTION C-C

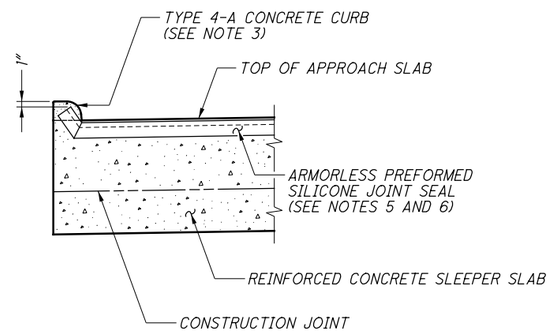

SECTION D-D

REINFORCING STEEL AND MIDWEST GUARDRAIL SYSTEM NOT SHOWN

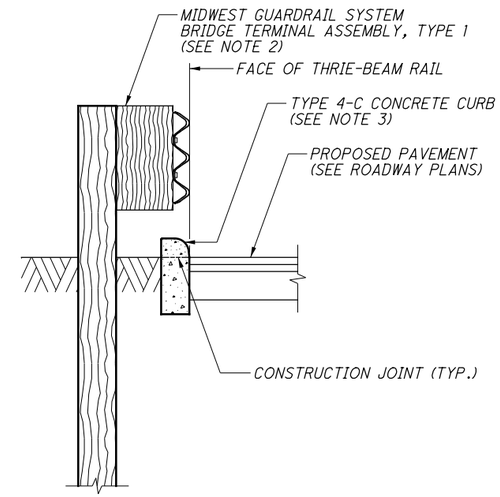

SECTION E-E

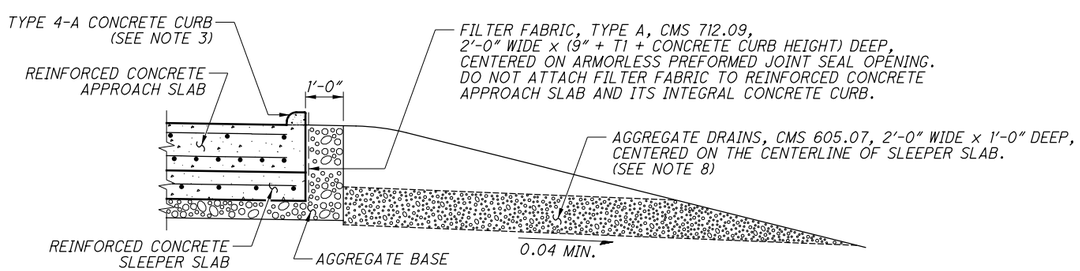

DETAIL A-A

MIDWEST GUARDRAIL SYSTEM NOT SHOWN

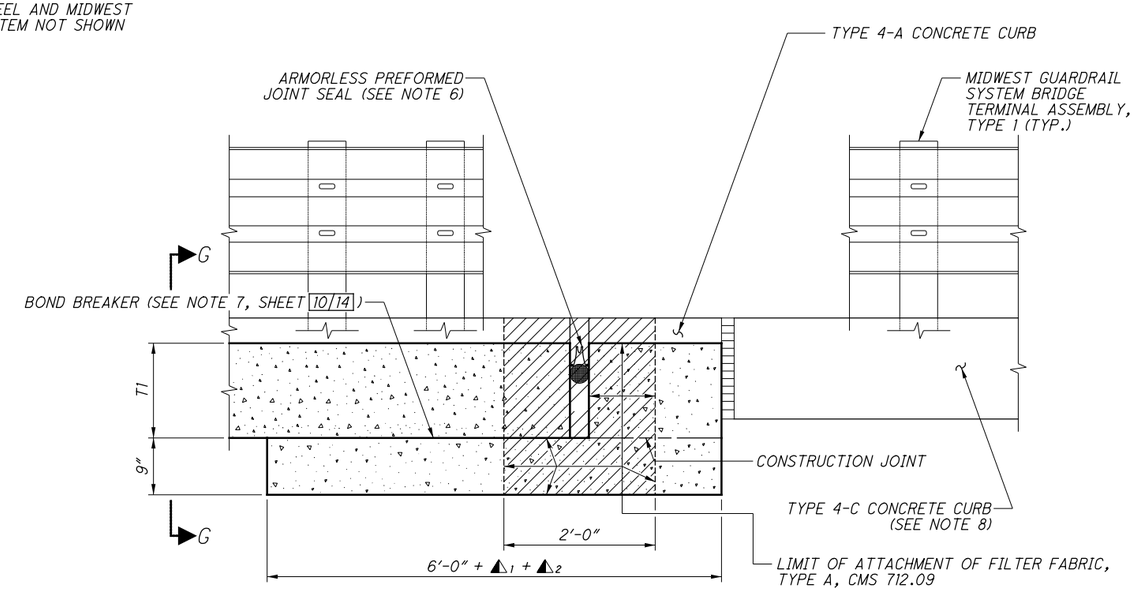

SECTION F-F

REINFORCING STEEL AND AGGREGATE BASE NOT SHOWN

= LIMIT OF FILTER FABRIC, TYPE A, CMS 712.09, 2'-0" WIDE x (9" + T1 + CONCRETE CURB HEIGHT) DEEP, CENTERED ON ARMORLESS PREFORMED JOINT SEAL OPENING

Δ1, Δ2 = ADDITIONAL LENGTH DUE TO GEOMETRY IF THE SKEW ANGLE IS GREATER THAN 0°. SEE DETAIL A ON SHEET 10/14.

NOTES:

1. FOR LOCATION OF SECTIONS C-C, D-D, AND E-E, SEE SHEET 10/14.
2. FOR MIDWEST GUARDRAIL SYSTEM BRIDGE TERMINAL ASSEMBLY, TYPE 1, SEE STD. CONST. DWG. MGS-3.1. MGS BRIDGE TERMINAL ASSEMBLEY, TYPE 2 (STD. CONST. DWG. MGS-3.2) SIMILAR.
3. FOR TYPE 4-A CONCRETE CURB AND TYPE 4-C CONCRETE CURB, SEE STD. CONST. DWG. BP-5.1.
4. FOR APPROACH SLAB REINFORCING STEEL AND ADDITIONAL DETAILS, SEE STD. BRIDGE DWG. AS-1-15.
5. FOR ARMORLESS PREFORMED JOINT SEAL OPENING TABLE SEE SHEET 7/14.
6. FOR ARMORLESS PREFORMED JOINT SEAL NOTE, SEE SHEET 8/14.
7. FOR GENERAL NOTES, SEE SHEET 14/14.
8. PLACE DRAINS AND OUTLETS ON THE LOW SIDE OF SUPERELEVATED APPROACH SLABS AND BOTH SIDES IF THE APPROACH SLABS IS CROWNED.

DESIGN AGENCY
OFFICE OF STRUCTURAL ENGINEERING

STATE OF OHIO DEPARTMENT OF TRANSPORTATION
01-17-14
DATE
ADMINISTRATOR

REVISIONS
07-17-15
01-19-18

AS-2-15

STANDARD BRIDGE DRAWING
APPROACH SLAB INSTALLATION (TYPE C)

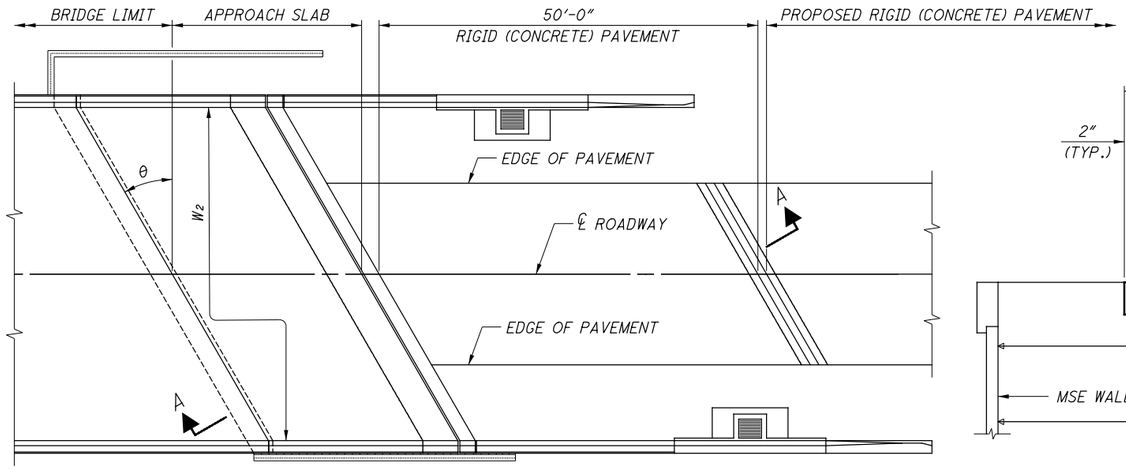

θ : SKEW ANGLE

W2 : APPROACH SLAB WIDTH (TOE-TO-TOE CONCRETE BRIDGE RAILING)

PLAN

JOINTLESS SUPERSTRUCTURE WITH MSE WALLS AND PROPOSED RIGID (CONCRETE) PAVEMENT

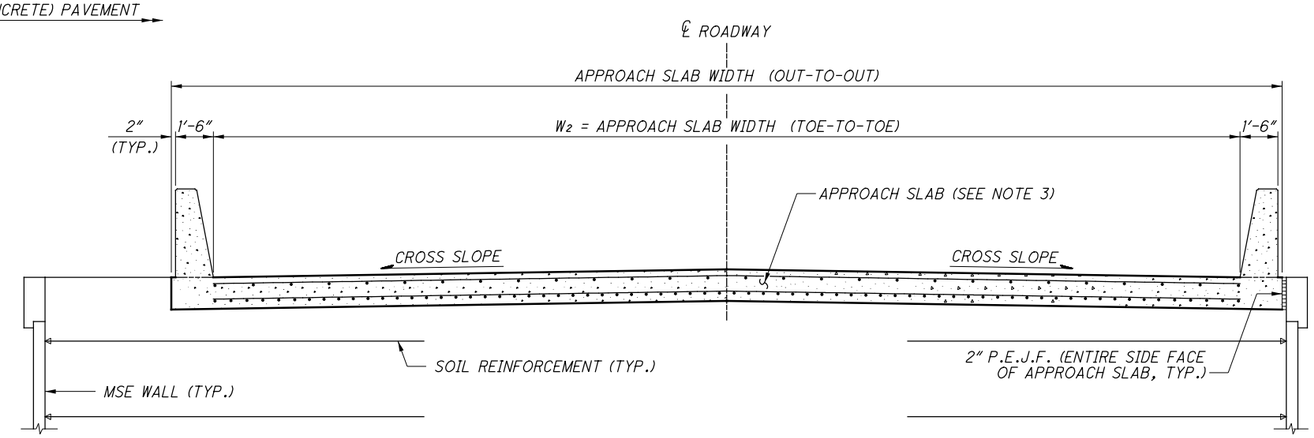

LEGEND:

P.E.J.F. = PREFORMED EXPANSION JOINT FILLER

ELEVATION

TAKEN PERPENDICULAR TO ℄ ROADWAY, LOOKING UP-STATION

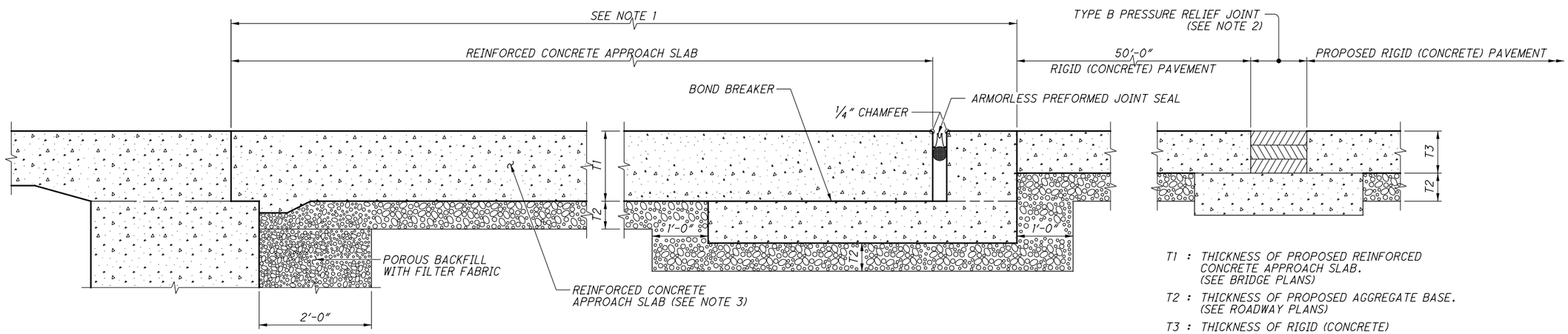

T1 : THICKNESS OF PROPOSED REINFORCED CONCRETE APPROACH SLAB. (SEE BRIDGE PLANS)

T2 : THICKNESS OF PROPOSED AGGREGATE BASE. (SEE ROADWAY PLANS)

T3 : THICKNESS OF RIGID (CONCRETE) PAVEMENT. (SEE ROADWAY PLANS)

SECTION A-A

REINFORCING STEEL NOT SHOWN

NOTES:

1. FOR ADDITIONAL DETAILS, NOTES, REINFORCING STEEL LIST, ARMORLESS PREFORMED JOINT SEAL OPENING TABLE SEE SHEETS 6/14 THROUGH 8/14.
2. FOR TYPE B PRESSURE RELIEF JOINT, SEE STD. CONST. DWG. BP-2.4.
3. FOR APPROACH SLAB REINFORCING STEEL AND ADDITIONAL DETAILS, SEE STD. BRIDGE DWG. AS-1-15.
4. FOR GENERAL NOTES, SEE SHEET 14/14.

DESIGN AGENCY
OFFICE OF STRUCTURAL ENGINEERING

STATE OF OHIO DEPARTMENT OF TRANSPORTATION
01-16-15
DATE
ADMINISTRATOR

REVISIONS
07-17-15
01-19-18

AS-2-15

STANDARD BRIDGE DRAWING
APPROACH SLAB INSTALLATION (TYPE C)

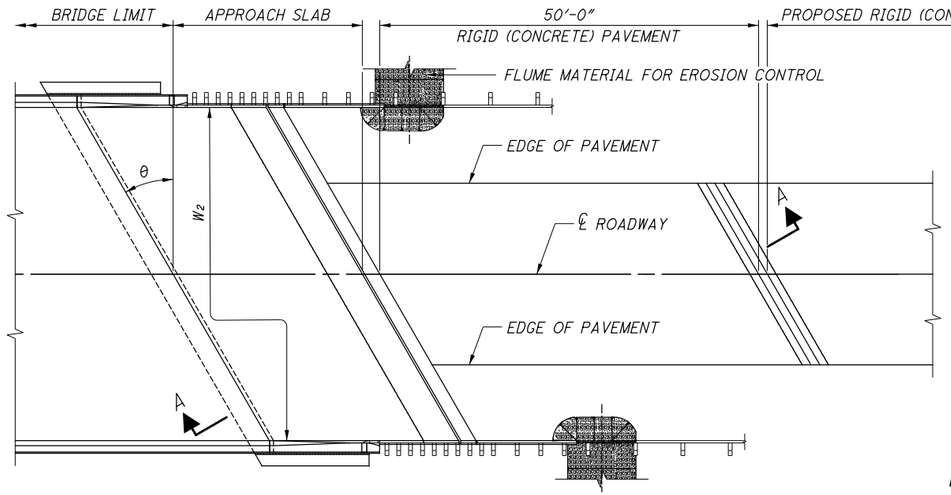

θ : SKEW ANGLE

W_2 : APPROACH SLAB WIDTH (TOE-TO-TOE CONCRETE BRIDGE RAILING/CONCRETE CURB)

PLAN

JOINTLESS SUPERSTRUCTURE WITH CAST-IN-PLACE CONCRETE TURNBACK WINGWALLS AND PROPOSED RIGID (CONCRETE) PAVEMENT

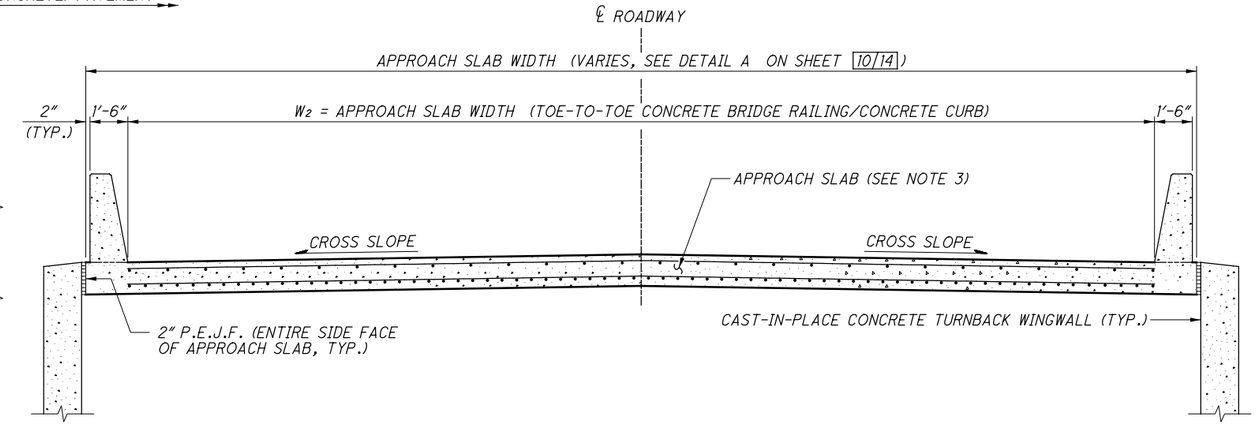

LEGEND:

P.E.J.F. = PREFORMED EXPANSION JOINT FILLER

ELEVATION

TAKEN PERPENDICULAR TO ℄ ROADWAY, LOOKING UP-STATION

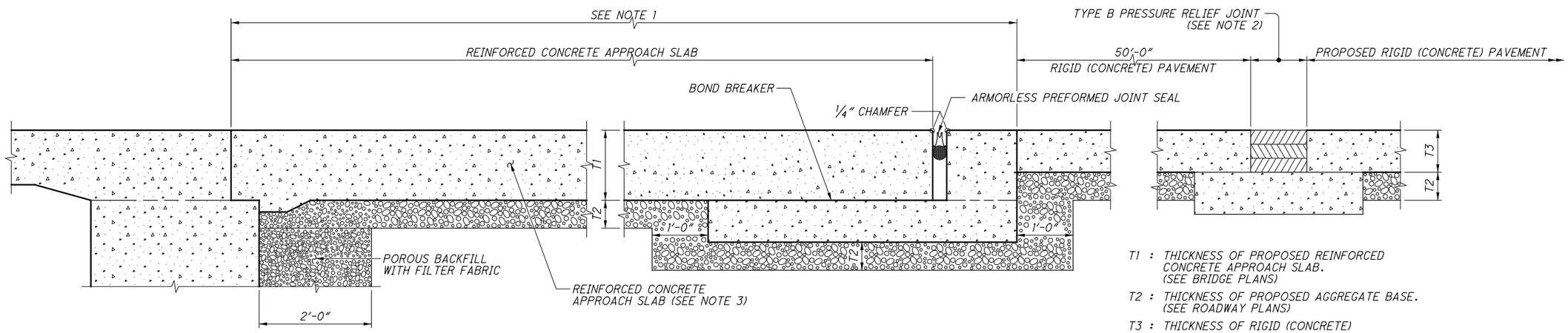

T1 : THICKNESS OF PROPOSED REINFORCED CONCRETE APPROACH SLAB. (SEE BRIDGE PLANS)

T2 : THICKNESS OF PROPOSED AGGREGATE BASE. (SEE ROADWAY PLANS)

T3 : THICKNESS OF RIGID (CONCRETE) PAVEMENT. (SEE ROADWAY PLANS)

SECTION A-A

REINFORCING STEEL NOT SHOWN

NOTES:

1. FOR ADDITIONAL DETAILS, NOTES, REINFORCING STEEL LIST, ARMORLESS PREFORMED JOINT SEAL OPENING TABLE, SEE SHEETS 9/14 THROUGH 11/14.
2. FOR TYPE B PRESSURE RELIEF JOINT, SEE STD. CONST. DWG. BP-2.4.
3. FOR APPROACH SLAB REINFORCING STEEL AND ADDITIONAL DETAILS, SEE STD. BRIDGE DWG. AS-1-15.
4. FOR GENERAL NOTES, SEE SHEET 14/14.

DESIGN AGENCY
OFFICE OF STRUCTURAL ENGINEERING

STATE OF OHIO DEPARTMENT OF TRANSPORTATION
01-16-15
DATE
ADMINISTRATOR

REVISIONS
07-17-15
01-19-18

AS-2-15

STANDARD BRIDGE DRAWING
APPROACH SLAB INSTALLATION
(TYPE C)

GENERAL NOTES

GENERAL:
THIS STANDARD DRAWING PROVIDES DESIGN AND GENERAL CONSTRUCTION DETAILS. THE PROJECT PLANS SHALL SHOW SKEW ANGLE, SPECIAL NOTES AND DETAILS (WHERE NECESSARY), AND A PAY ITEM FOR TYPE A, TYPE B, OR TYPE C INSTALLATION IN THE ESTIMATED QUANTITIES TABLE. FOR CONDITIONS OTHER THAN THOSE INDICATED HEREON, THE APPROACH SLAB INSTALLATION SHALL BE ADAPTED TO FIT THE ENDS OF THE REINFORCED CONCRETE APPROACH SLAB.

FOR BRIDGES AND APPROACH SLABS WITH SIDEWALKS, THE DETAILS WILL BE SIMILAR TO THE DETAILS SHOWN HERE. THE WIDTH OF THE APPROACH SLAB SHALL BE THE FULL WIDTH OF THE BRIDGE AND THE SIDEWALK WILL BE ON TOP OF THE APPROACH SLAB.

DESCRIPTION:
PERFORM WORK IN ACCORDANCE WITH CMS 526 EXCEPT AS NOTED HEREIN.

DESIGN CRITERIA:
THIS STANDARD DRAWING CONFORMS TO THE "AASHTO LRFD BRIDGE DESIGN SPECIFICATIONS", ADOPTED BY THE AMERICAN ASSOCIATION OF STATE HIGHWAY AND TRANSPORTATION OFFICIALS, 2014 AND THE ODOT BRIDGE DESIGN MANUAL, 2007.

DESIGN DATA:
DESIGN LOADING: HL-93
F.W.S. = 0.060 KSF
DESIGN STRESSES:
CONCRETE - COMPRESSIVE STRENGTH = 4.5 KSI
REINFORCING STEEL - MIN. YIELD STRENGTH = 60 KSI

REINFORCED CONCRETE SLEEPER SLAB LENGTH:
FOR TYPE A INSTALLATION AND TYPE C INSTALLATION, THE LENGTH OF SLEEPER SLAB SHALL BE FOR THE ENTIRE WIDTH OF THE APPROACH SLAB AS SHOWN ON SHEETS 1/14 THROUGH 2/14 AND SHEETS 6/14 THROUGH 13/14, RESPECTIVELY. FOR A SKEWED STRUCTURE, THE SLEEPER SLAB SHALL BE PLACED PARALLEL TO THE SKEW AT THE END OF APPROACH SLAB.

LONGITUDINAL CONTRUCTION JOINTS:
FOR STAGE CONSTRUCTION, LONGITUNDINAL JOINT SHALL BE IN ACCORDANCE WITH CMS 511. PROVIDE 2'-6" LAP SPLICE OF SS501 REBARS OR PROVIDE MECHANICAL CONNECTORS PER CMS 509.07.

REINFORCED CONCRETE SLEEPER SLAB SURFACE FINISH AND BOND BREAKER:
FOR TYPE A INSTALLATION AND TYPE C INSTALLATION, THE TOP SURFACE OF REINFORCED CONCRETE SLEEPER SLAB SHALL BE STEEL TROWELLED FOR A SMOOTH FINISH.

WATER CURE THE SLEEPER SLAB AS PER CMS 511.14.A. AFTER WATER CURING HAS BEEN COMPLETED, MEMBRANE CURE THE SLEEPER SLAB AS PER CMS 511.14.B. APPLY A SECOND COAT OF THE MEMBRANE CURE TO THE SLEEPER SLAB PRIOR TO APPROACH SLAB CONCRETE POUR AT THE SAME DOSAGE RATE SPECIFIED IN CMS 511.14.B TO THE SURFACES LABELED "BOND BREAKER" ON SHEETS 1/14 AND 2/14, FOR TYPE A INSTALLATION AND SHEETS 6/14 THROUGH 13/14 FOR TYPE C INSTALLATION.

REPAIR COATING DAMAGE IDENTIFIED BY THE ENGINEER.

METHOD OF MEASUREMENT:
FOR TYPE A INSTALLATION AND TYPE C INSTALLATION, THE DEPARTMENT WILL MEASURE REINFORCED CONCRETE SLEEPER SLAB BY THE NUMBER OF LINEAR FEET COMPLETE IN PLACE AND MEASURED ALONG THE SKEW AT THE END OF THE APPROACH SLAB.

FOR TYPE B INSTALLATION (SHEETS 3/14 THROUGH 5/14), THE DEPARTMENT WILL MEASURE THE REINFORCED JOINT MESH BY THE NUMBER OF SQUARE YARDS OF APPLIED SURFACE AREA, MEASURED ALONG THE SKEW. SEE NOTE FOR "REINFORCED JOINT MESH" ON SHEET 5/14. THERE IS NO REINFORCED CONCRETE SLEEPER SLAB IN TYPE B INSTALLATION.

BASIS OF PAYMENT:
THE DEPARTMENT WILL PAY FOR ACCEPTED QUANTITIES AT THE CONTRACT PRICE FOR "ITEM 526 - TYPE * INSTALLATION" (* : DESIGNER SHOULD FILL IN THE APPROPRIATE TYPE A, TYPE B, OR TYPE C) WHICH INCLUDES:
- 6" DIA. PERFORATED PIPE (CMS 707.31) UNDERDRAIN (TYPE A INSTALLATION)
- GRANULAR MATERIAL FOR THE UNDERDRAIN (TYPE A INSTALLATION)
- PIPE COUPLINGS (TYPE A INSTALLATION)
- PIPE OUTLETS AS PER STD. CONSTR. DWG. DM-1.1 AND PIPE INSTALLATIONS AS PER STD. CONSTR. DWG. DM 1.2, IF REQUIRED (TYPE A INSTALLATION)
- AGGREGATE DRAINS (TYPE A INSTALLATION AND TYPE C INSTALLATION)
- REINFORCED JOINT MESH (TYPE B INSTALLATION)
- EXCAVATION FOR REINFORCED CONCRETE SLEEPER SLAB (TYPE A INSTALLATION AND TYPE C INSTALLATION)
- REINFORCED CONCRETE SLEEPER SLAB (TYPE A INSTALLATION AND TYPE C INSTALLATION)
- REINFORCING STEEL INCLUDING SUPPORTS, TIE WIRES, AND IF REQUIRED, MECHANICAL CONNECTORS (TYPE A INSTALLATION AND TYPE C INSTALLATION)
- BOND BREAKER (TYPE A INSTALLATION AND TYPE C INSTALLATION)
- LONGITUDINAL CONSTRUCTION JOINT FOR STAGE CONSTRUCTION, IF REQUIRED (FOR TYPE A INSTALLATION AND TYPE C INSTALLATION)

THE DEPARTMENT WILL PAY FOR THE FOLLOWING ITEMS SEPARATELY:
- REINFORCED CONCRETE APPROACH SLAB WITH CURBS IF REQ'D.
- FLEXIBLE (ASPHALT) PAVEMENT
- RIGID (CONCRETE) PAVEMENT
- PAVEMENT AGGREGATE BASE
- OPTIONAL ASPHALT CONCRETE WEARING COURSES
- TACK COAT
- POLYMER MODIFIED ASPHALT JOINT SYSTEMS (TYPE A INSTALLATION)
- ARMORLESS PREFORMED JOINT SEAL (TYPE C INSTALLATION)
- PREFORMED EXPANSION JOINT FILLER

DESIGN AGENCY
OFFICE OF STRUCTURAL ENGINEERING

STATE OF OHIO DEPARTMENT OF TRANSPORTATION
01-16-15
DATE
ADMINISTRATOR

REVISIONS
07-17-15
01-19-18

AS-2-15

STANDARD BRIDGE DRAWING
APPROACH SLAB INSTALLATION

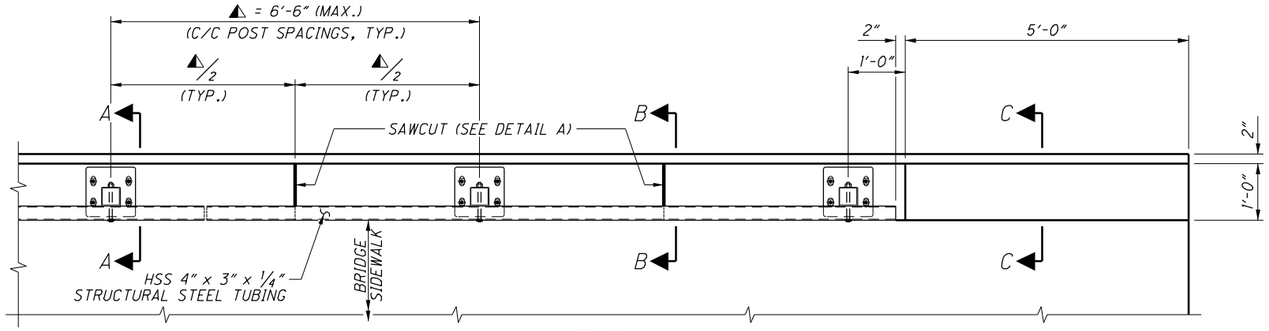

PLAN

BRIDGE SIDEWALK RAILING WITHOUT APPROACH RAILING

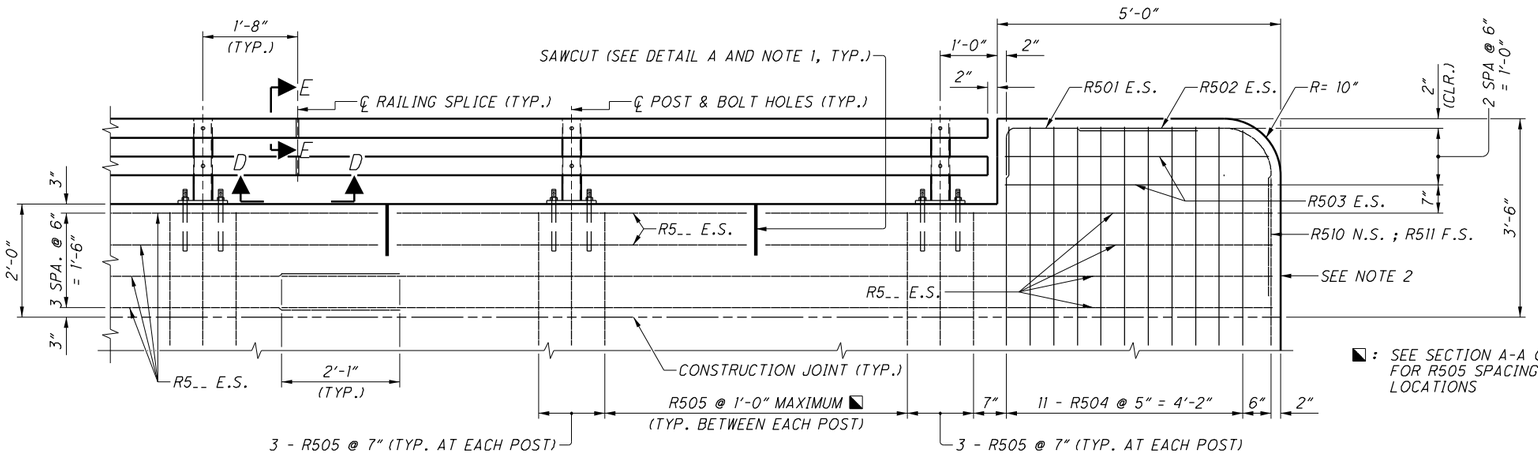

◪: SEE SECTION A-A ON SHEET 5/5 FOR R505 SPACINGS AT SAWCUT LOCATIONS

ELEVATION

BRIDGE SIDEWALK RAILING WITHOUT APPROACH RAILING

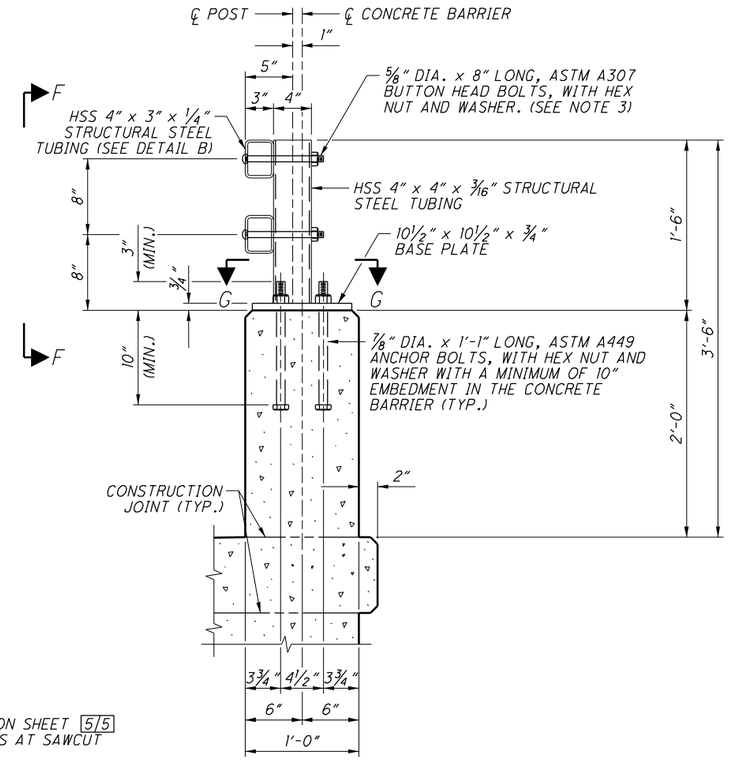

SECTION A-A

SEE NOTE 4
REINFORCING STEEL NOT SHOWN

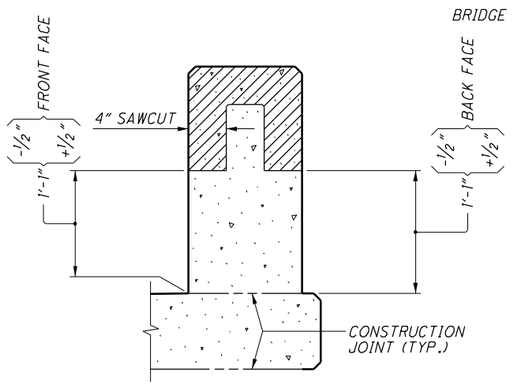

DETAIL A

SECTION THROUGH SAWCUT
SAWCUT PERIMETER = 2'-10"

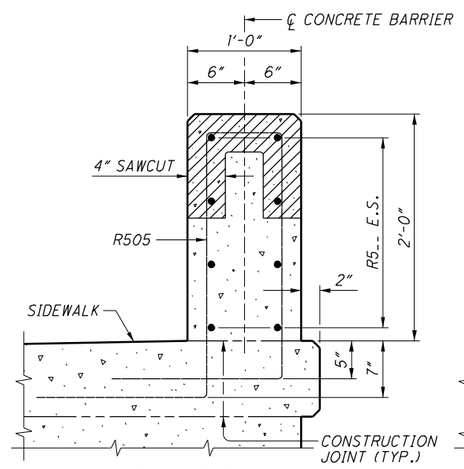

SECTION B-B

RAILING NOT SHOWN

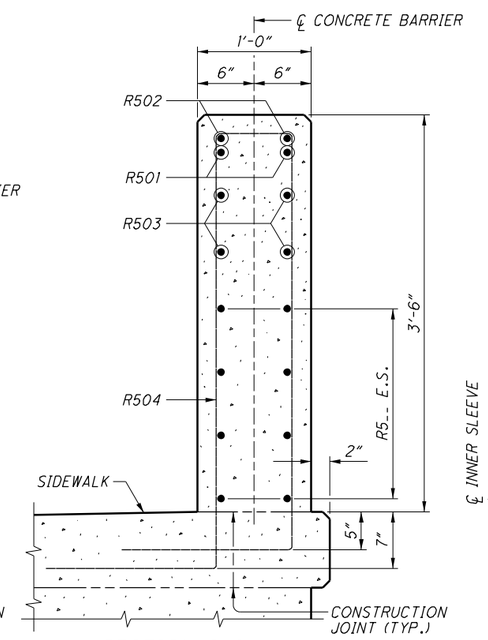

SECTION C-C

LEGEND:

CLR. = CLEARANCE
DIA. = DIAMETER
E.S. = EACH SIDE
F.S. = FAR SIDE
HSS = HOLLOW STRUCTURAL SECTION
N.S. = NEAR SIDE
R = RADIUS
SPA. = SPACES

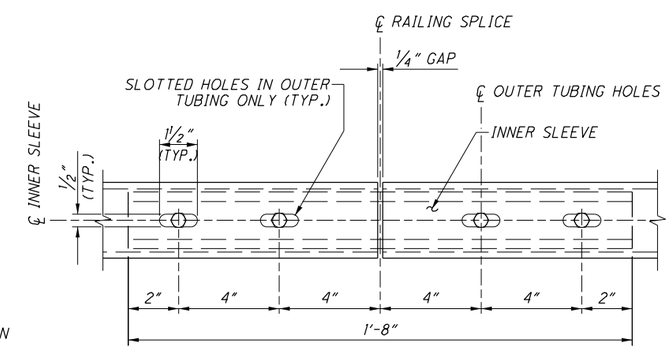

VIEW D-D

SEE NOTE 5

NOTES:

1. FOR DEFLECTION JOINT DETAILS AND GENERAL NOTES, SEE SHEET 5/5.
2. VERTICAL SURFACE AT THE END OF WALL SHALL BE NORMAL TO GRADE.
3. FOR RAIL-TO-POST BOLT DETAILS AND NOTES, SEE SHEET 2/5.
4. THE HORIZONTAL RAILING ELEMENTS SHALL BE PLACED FLUSH WITH THE FACE OF THE CONCRETE BARRIER.
5. BOLTS IN SLOTTED HOLES SHALL NOT BE DRAWN UP SO TIGHT AS TO PREVENT SLIDING BETWEEN THE OUTER TUBE AND THE INNER SLEEVE.
6. FOR DETAIL B, SECTION E-E, VIEW F-F, SECTION G-G, AND ADDITIONAL NOTES SEE SHEET 2/5.
7. FOR REINFORCING STEEL LIST, SEE SHEET 3/5.
8. FOR BRIDGE SIDEWALK RAILING WITH APPROACH RAILING, SEE SHEET 3/5.

DESIGN AGENCY
OFFICE OF STRUCTURAL ENGINEERING

STATE OF OHIO DEPARTMENT OF TRANSPORTATION
07-17-15
DATE
ADMINISTRATOR

REVISIONS

BR-2-15

STANDARD BRIDGE DRAWING
BRIDGE SIDEWALK RAILING WITH CONCRETE BARRIER

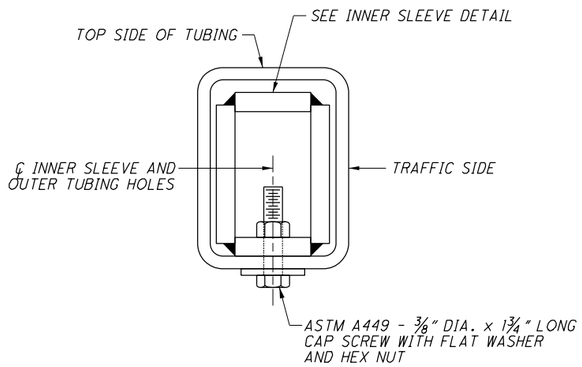

SECTION E-E
AT RAILING INTERNAL SPLICE

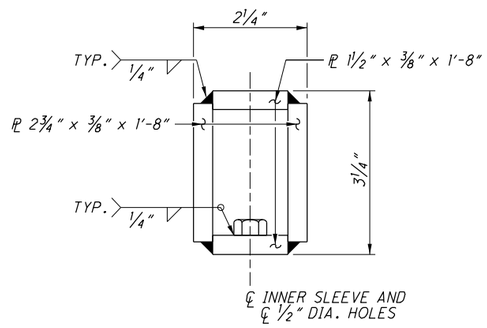

INNER SLEEVE DETAIL
AT RAILING INTERNAL SPLICE
(FINISHED DIMENSIONS)

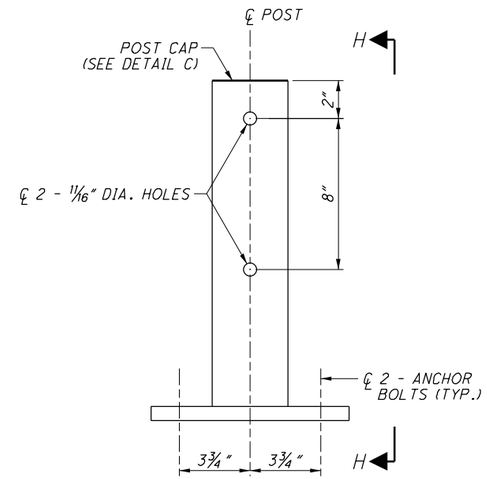

VIEW F-F
RAILING AND CONCRETE BARRIER NOT SHOWN

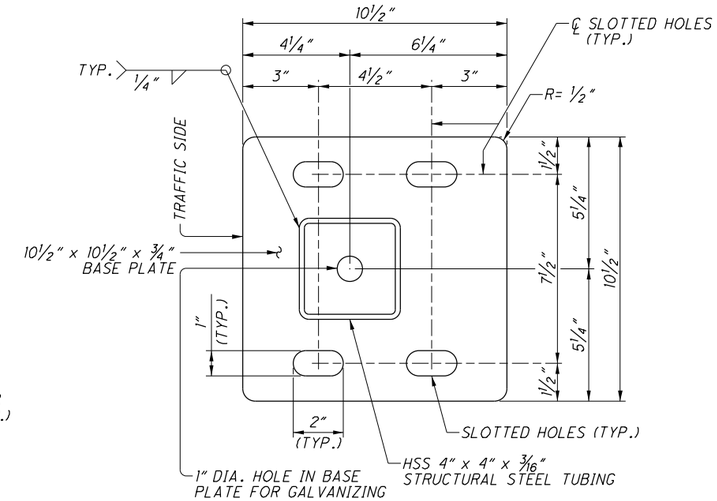

SECTION G-G
RAILING AND CONCRETE BARRIER NOT SHOWN
SEE NOTE 2

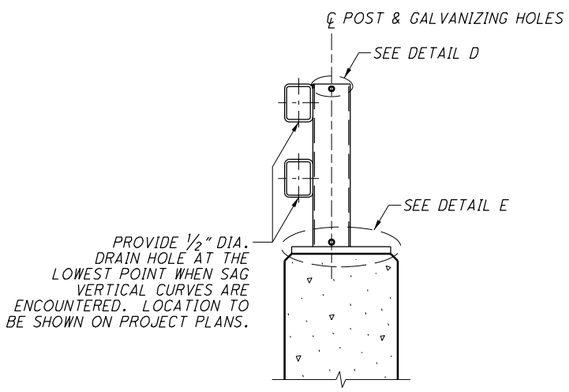

SECTION H-H
ANCHOR BOLTS NOT SHOWN

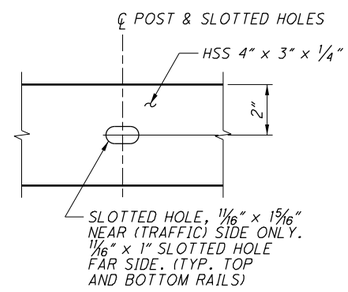

DETAIL B
SLOTTED HOLE AT STRUCTURAL STEEL TUBE RAIL

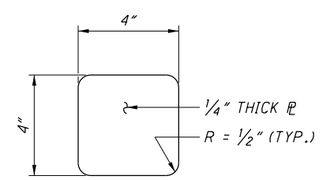

DETAIL C
POST CAP DETAIL

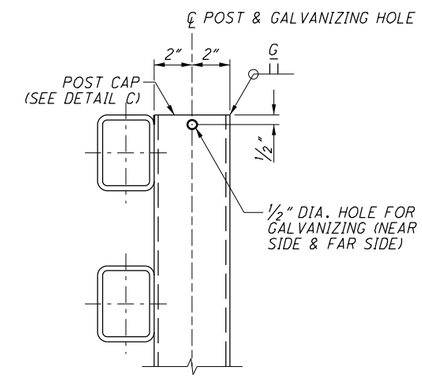

DETAIL D

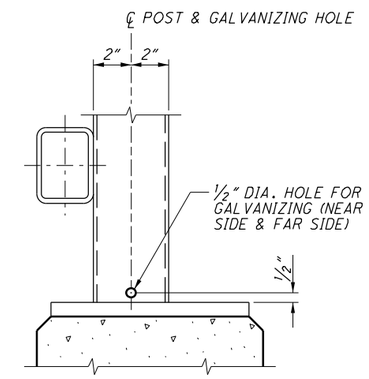

DETAIL E

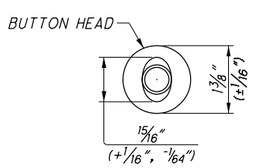

VIEW J-J

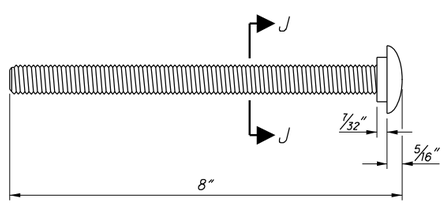

ALTERNATIVE NO. 1
RAIL-TO-POST BOLT

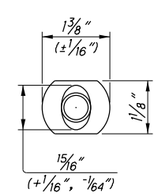

VIEW K-K

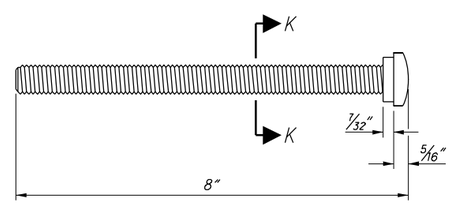

ALTERNATIVE NO. 2
RAIL-TO-POST BOLT

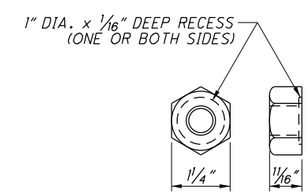

RAIL-TO-POST NUT
SEE NOTE 3

NOTES:

1. FOR LOCATION OF DETAIL B, SECTION E-E, VIEW F-F, AND SECTION G-G, SEE SHEET 1/5.
2. FOR BRIDGE SIDEWALK RAILING WITH VANDAL PROTECTION FENCE, SEE "MODIFIED BP-1 OR BP-3" ON SHEET 4/5.
3. THE NUTS SHALL BE TIGHTENED TO THE SNUG TIGHT CONDITION TO BRING THE CONNECTED PLIES INTO FIRM CONTACT.
4. FOR RAILING DETAIL AT DECK EXPANSION JOINT, SEE SHEET 4/5.
5. FOR DEFLECTION JOINT DETAILS AND GENERAL NOTES, SEE SHEET 5/5.

LEGEND:

DIA. = DIAMETER
HSS = HOLLOW STRUCTURAL SECTION
R = RADIUS

DESIGN AGENCY
OFFICE OF STRUCTURAL ENGINEERING

STATE OF OHIO DEPARTMENT OF TRANSPORTATION
07-17-15
DATE
ADMINISTRATOR

REVISIONS

BR-2-15

STANDARD BRIDGE DRAWING
BRIDGE SIDEWALK RAILING WITH CONCRETE BARRIER

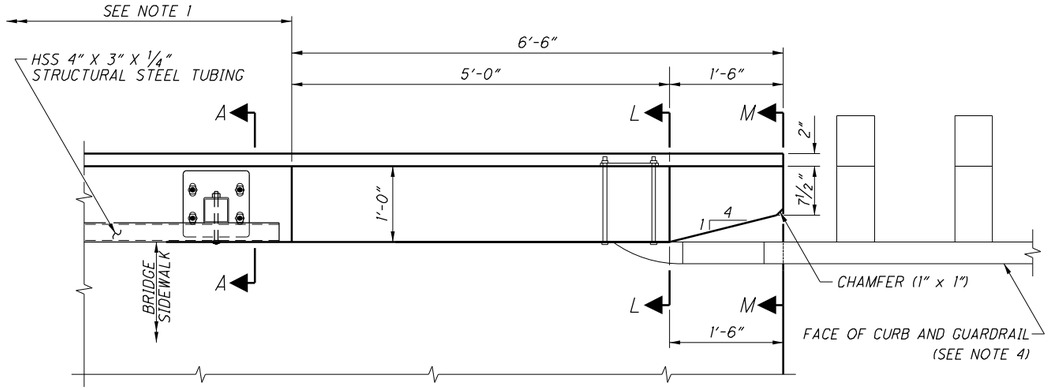

PLAN

BRIDGE SIDEWALK RAILING WITH APPROACH RAILING

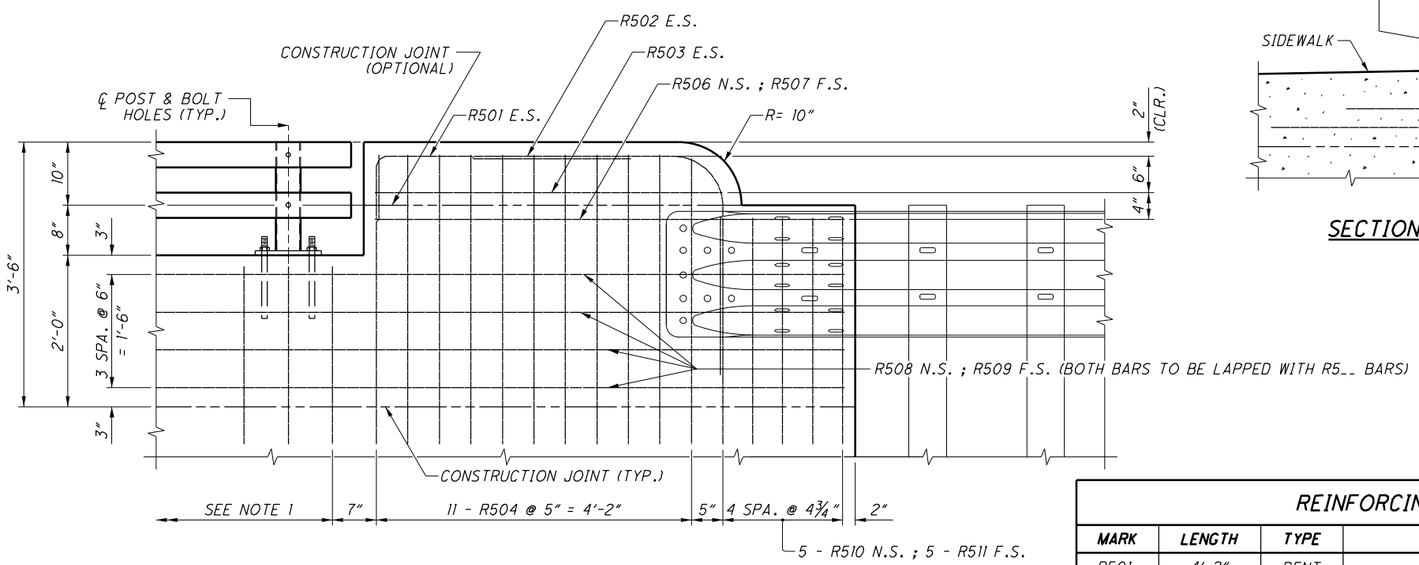

ELEVATION

BRIDGE SIDEWALK RAILING WITH APPROACH RAILING

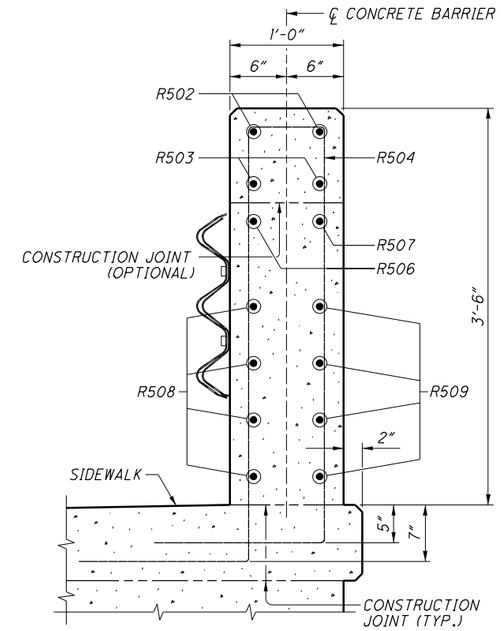

SECTION L-L

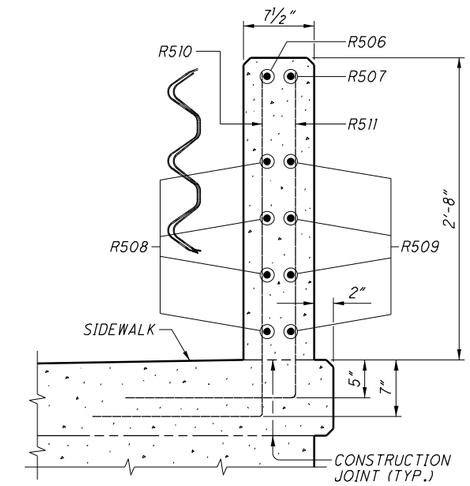

SECTION M-M

LEGEND:

CLR. = CLEARANCE
E.S. = EACH SIDE
F.S. = FAR SIDE
HSS = HOLLOW STRUCTURAL SECTION
N.S. = NEAR SIDE
R = RADIUS
SPA. = SPACES

NOTES:

1. FOR ADDITIONAL DETAILS AND NOTES, SEE SHEET 1/5 AND 2/5.
2. FOR SECTION A-A, SEE SHEET 1/5.
3. FOR SAWCUT PERIMETER LENGTH, SEE DETAIL A ON SHEET 1/5.
4. FOR BRIDGE TERMINAL ASSEMBLY, SEE STD. CONSTR. DWGS. MGS-3.1 AND MGS-3.2.
5. FOR BRIDGE SIDEWALK RAILING WITH VANDAL PROTECTION FENCE, SEE "MODIFIED BP-1 OR BP-3" ON SHEET SHEET 4/5.
6. FOR RAILING DETAIL AT DECK EXPANSION JOINT, SEE SHEET 4/5.
7. FOR DEFLECTION JOINT DETAILS AND GENERAL NOTES, SEE SHEET 5/5.

REINFORCING STEEL FOR BRIDGE SIDEWALK RAILING WITH CONCRETE BARRIER

MARK	LENGTH	TYPE
R501	4'-2"	BENT
R502	6'-1"	BENT
R503	4'-7"	STR
R504	10'-10"	BENT
R505	7'-10"	BENT
R506	6'-3"	BENT
R507	6'-2"	STR
R508	⊕ + 1'-5"	BENT
R509	⊕	STR
R510	4'-6"	BENT
R511	4'-4"	BENT
R5__	⊕	STR

BENDING DIAGRAMS

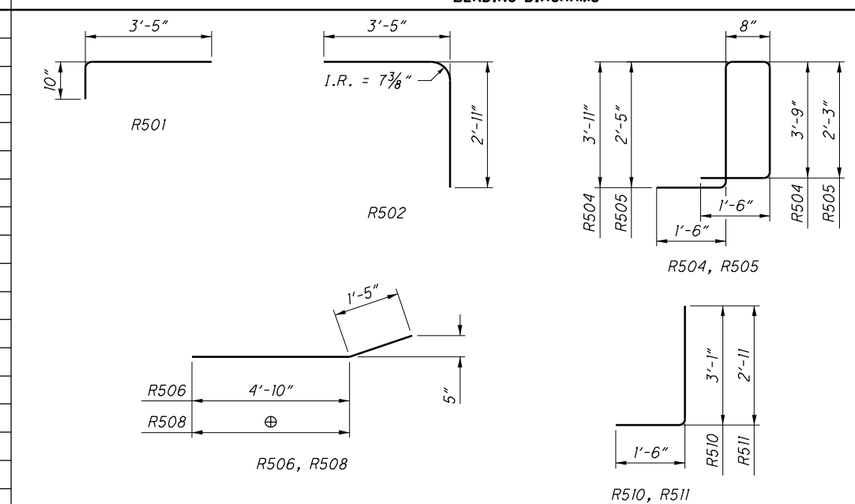

⊕ SEE PROJECT PLANS.

DESIGN AGENCY
OFFICE OF
STRUCTURAL ENGINEERING

STATE OF OHIO DEPARTMENT OF TRANSPORTATION

07-17-15
DATE

ADMINISTRATOR

REVISIONS

BR-2-15

STANDARD BRIDGE DRAWING
BRIDGE SIDEWALK RAILING WITH CONCRETE BARRIER

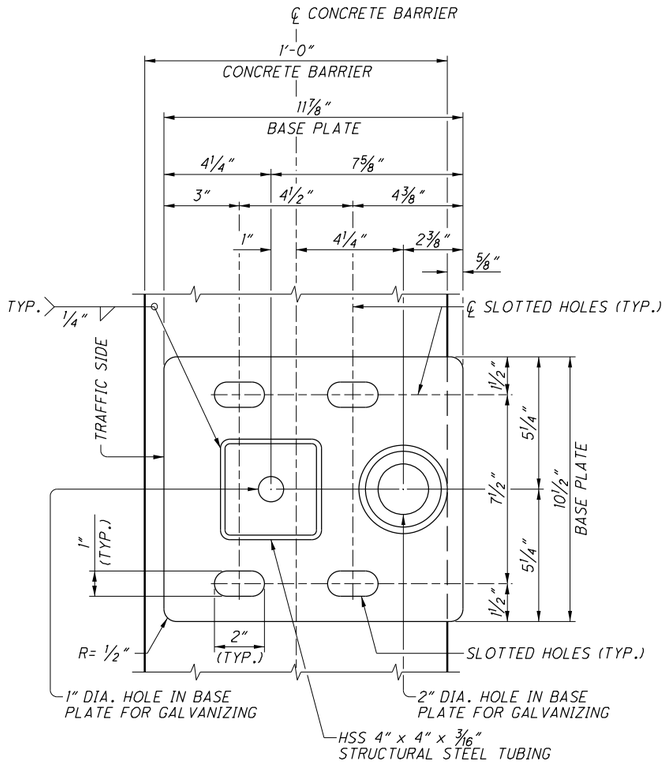

PLAN - MODIFIED BP-1 OR BP-3

SEE NOTE 1
STEEL TUBE RAILING NOT SHOWN

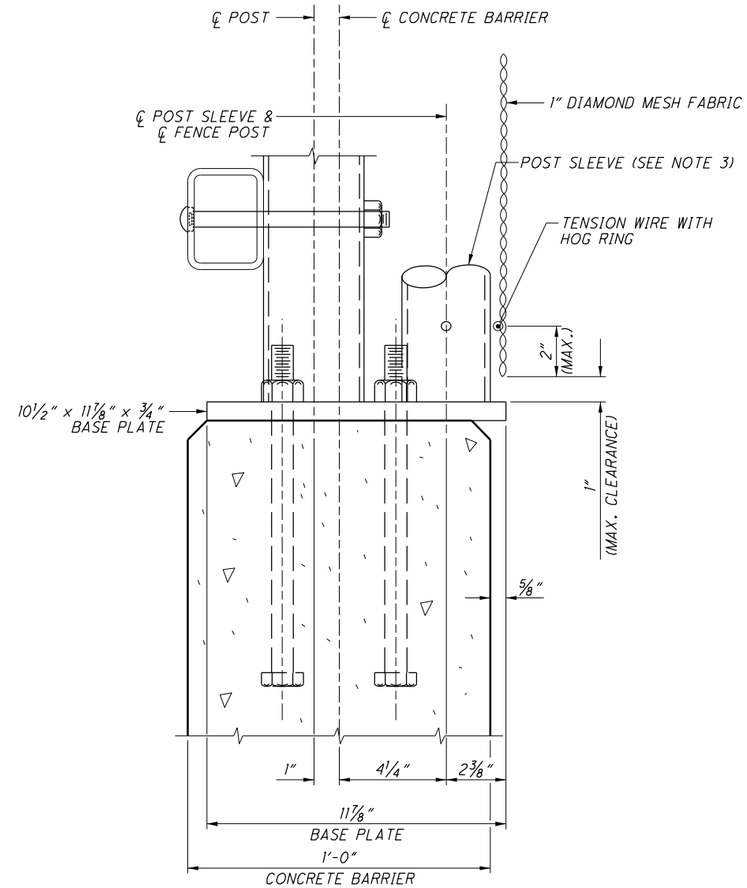

ELEVATION - MODIFIED BP-1 OR BP-3

SEE NOTE 1
REINFORCING STEEL NOT SHOWN

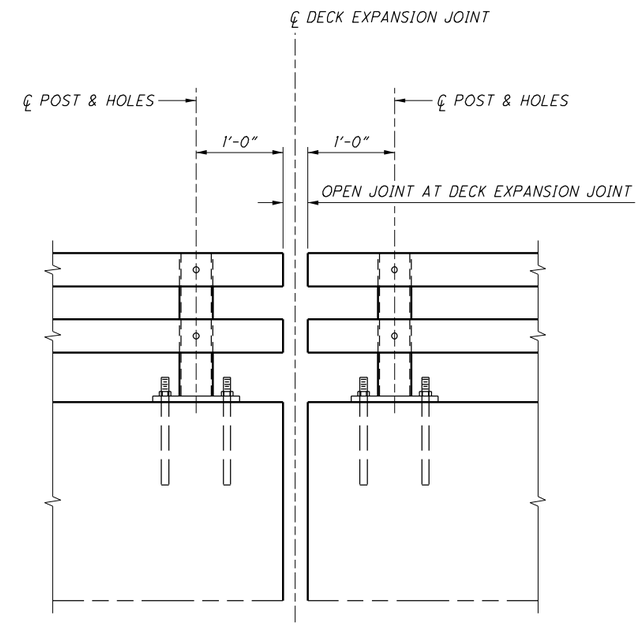

RAILING DETAIL AT DECK EXPANSION JOINT

REINFORCING STEEL NOT SHOWN

LEGEND:

DIA. = DIAMETER
HSS = HOLLOW STRUCTURAL SECTION
R = RADIUS

NOTES:

1. FOR BRIDGE SIDEWALK RAILING WITH VANDAL PROTECTION FENCE AS SHOWN IN STD. BRIDGE DWG. VPF-1-90, MODIFIED BP-1 OR BP-3 SHALL BE UTILIZED INSTEAD OF BP-1 OR BP-3 IN ORDER TO ACCOMODATE PLACEMENT OF VANDAL PROTECTION FENCE POSTS AND POST SLEEVES. FOR ADDITIONAL DETAILS AND NOTES ON VANDAL PROTECTION FENCE, SEE STD. BRIDGE DWG. VPF-1-90.
2. FOR DEFLECTION JOINT DETAILS AND GENERAL NOTES, SEE SHEET 5/5.
3. FABRICATE POST SLEEVE AND ATTACH TO BASE PLATE AS SHOWN ON STD. BRIDGE DWG. VPF-1-90, SHEET 3/7.

DESIGN AGENCY
OFFICE OF STRUCTURAL ENGINEERING

STATE OF OHIO DEPARTMENT OF TRANSPORTATION
07-17-15
DATE
ADMINISTRATOR

REVISIONS

BR-2-15

STANDARD BRIDGE DRAWING
BRIDGE SIDEWALK RAILING WITH CONCRETE BARRIER

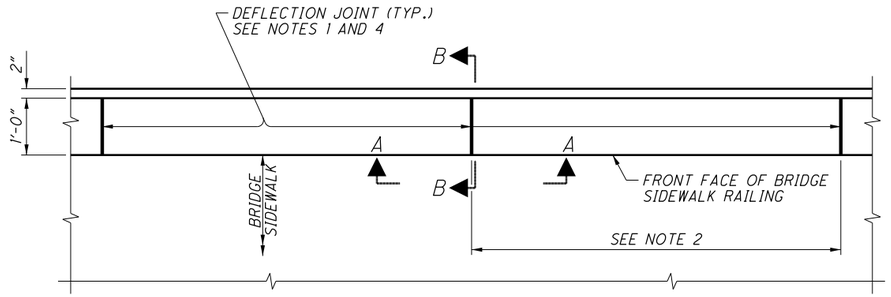

PLAN VIEW
DEFLECTION JOINT DETAIL

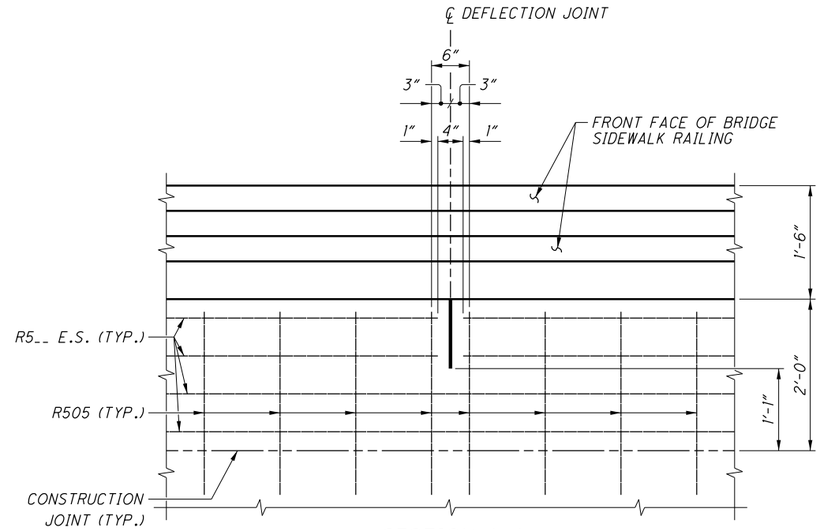

SECTION A-A

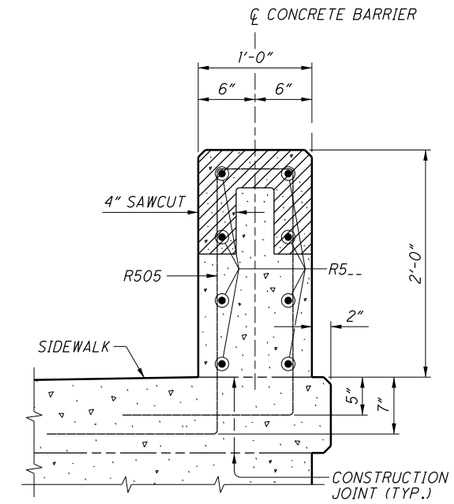

SECTION B-B
STEEL TUBE RAILING NOT SHOWN

NOTES:

1. FOR THE ENTIRE LENGTH OF BRIDGE SIDEWALK BARRIER, PROJECT PLANS SHALL SHOW THE LOCATIONS OF DEFLECTION JOINTS.
2. DEFLECTION JOINT SPACING SHALL NOT EXCEED 13'-0" ON CENTERS. FOR CONTINUOUS STRUCTURES, THE DEFLECTION JOINTS WITHIN THE DEAD LOAD CONTRAFLEXURE (NEGATIVE MOMENT REGIONS OVER PIER LOCATIONS) SHALL BE SPACED NOT LESS THAN 5'-0" NOR MORE THAN 6'-6" ON CENTERS.
3. LIMITS OF SAWCUT IS SHOWN IN DETAIL A, SHEET 1/5. THE 4" SAWCUT DEPTH SHOWN IN DETAIL A IS THE MINIMUM REQUIRED. HOWEVER, THE CONTRACTOR HAS AN OPTION TO PERFORM FULL DEPTH SAWCUT.

GENERAL NOTES

GENERAL:
THIS STANDARD BRIDGE DRAWING PROVIDES DESIGN AND CONSTRUCTION DETAILS. THE PROJECT PLANS SHALL PROVIDE THE NECESSARY ADDITIONAL BRIDGE SIDEWALK RAILING DIMENSIONS INCLUDING CONCRETE BARRIER LENGTH, RAILING POST SPACING, VANDAL PROTECTION POST SPACING (IF APPLICABLE), REINFORCING STEEL LIST, ESTIMATED QUANTITIES, AND ANY OTHER PERTINENT INFORMATION INCLUDING SPECIAL NOTES AND DETAILS. THE DEPARTMENT WILL NOT ALLOW SLIPFORMING OF CONCRETE BARRIER.

DESIGN CRITERIA:
BRIDGE SIDEWALK RAILING WITH CONCRETE BARRIER MEETS THE REQUIREMENTS OF NCHRP 350 TEST LEVEL 4 AND "AASHTO LRFD BRIDGE DESIGN SPECIFICATIONS", 2014.

DESIGN DATA:
CONCRETE - COMPRESSIVE STRENGTH = 4.5 KSI

REINFORCING STEEL - MINIMUM YIELD STRENGTH = 60 KSI

STRUCTURAL STEEL TUBING - MINIMUM YIELD STRENGTH = 46 KSI

ALL OTHER STEEL - MINIMUM YIELD STRENGTH = 36 KSI

STRUCTURAL STEEL TUBE SPLICES:
TUBE SPLICES ARE TO BE LOCATED SO THAT EACH TUBE SEGMENT SHALL BE CONNECTED TO NOT LESS THAN TWO (2) POSTS AND NOT MORE THAN SEVEN (7) POSTS.

STRUCTURAL STEEL MATERIALS:
FURNISH SHAPED STRUCTURAL STEEL TUBE ACCORDING TO CMS 707.10 (ASTM A500, GRADE B), REINFORCING STEEL ACCORDING TO CMS 709.00, AND STEEL FOR PLATES ACCORDING TO CMS 711.01. FOR POST SLEEVE AND HEXAGON SOCKET SET SCREW MATERIALS, SEE STD. BRIDGE DWG. VPF-1-90, SHEET 1/6.

FASTENERS:
FURNISH FASTENERS AS FOLLOWS:
THE ANCHOR BOLTS SHALL BE HEAVY HEX ASTM A449 WITH HARDENED STEEL WASHERS AND HEAVY HEX NUTS.

THE HORIZONTAL RAIL-TO-POST CONNECTION BOLTS AND HEX NUTS SHALL CONFORM TO CMS 711.10 (ASTM A307) AND TO SHEET 2/5. THE WASHERS SHALL CONFORM TO ASTM F436, TYPE 1.

THE HEX CAP SCREWS (BOLTS), HEX NUTS, AND WASHERS AT RAILING INTERNAL SPLICE, AS SHOWN IN SECTION E-E ON SHEET 2/5, SHALL CONFORM TO ASTM A449.

GALVANIZING:
GALVANIZE ALL SHAPED STRUCTURAL STEEL TUBES, PLATES, HARDWARE, AND ACCESSORIES ACCORDING TO CMS 711.02. ROUND ALL EXPOSED STRUCTURAL STEEL TUBE ENDS AND POST CAP EDGES PRIOR TO GALVANIZING.

HORIZONTAL CURVATURES:
THIS STANDARD BRIDGE DRAWING IS APPLICABLE TO STRUCTURES HAVING A RAILING CURVATURE RADIUS OF TWENTY (20) FEET OR MORE. FOR A RADIUS OF LESS THAN TWENTY (20) FEET, THE DESIGN SHALL BE SPECIAL. FOR STRUCTURES ON CURVATURES OF 3° OR MORE, SHAPED STRUCTURAL STEEL TUBE MAY BE FURNISHED STRAIGHT AND FORCED INTO POSITION IN THE FIELD AND THE TUBE SEGMENTS ARE TO BE ATTACHED TO NO MORE THAN THREE (3) POSTS.

DEFLECTION JOINTS FOR CONCRETE PARAPETS:
SAWCUT 1¼ INCH DEEP DEFLECTION JOINTS ALONG THE PERIMETER OF THE PARAPET WHEN THE CONCRETE IS STILL GREEN OR AS SOON AS THE SAW CAN BE OPERATED WITHOUT DAMAGING THE CONCRETE.

AFTER THE CONCRETE CURING PERIOD SPECIFIED IN CMS 511.14 HAS BEEN REACHED, PERFORM 4" SAWCUT AS SHOWN IN DETAIL A, SHEET 1/5.

THE CONTRACTOR HAS AN OPTION TO PERFORM FULL DEPTH SAWCUT. HOWEVER, THE SAWCUT SHALL NOT BE LESS THAN 1'-0½" FROM THE TOP OF THE CONCRETE DECK SLAB.

USE AN EDGE GUIDE, FENCE, OR JIG TO ENSURE THAT THE CUT JOINT IS STRAIGHT, TRUE, AND ALIGNED ON ALL FACES OF THE PARAPET. THE JOINT WIDTH SHALL BE THE WIDTH OF THE SAW BLADE, A NOMINAL WIDTH OF ¼ INCH.

SEAL THE PERIMETER OF THE DEFLECTION JOINTS TO A MINIMUM DEPTH OF ONE INCH WITH A POLYURETHANE OR POLYMERIC MATERIAL CONFORMING TO ASTM C920, TYPE S. LEAVE THE BOTTOM ½ INCH OF BOTH THE INSIDE AND OUTSIDE FACES OF THE PARAPET UNSEALED TO ALLOW ANY WATER WHICH MAY ENTER THE JOINT TO ESCAPE.

MINIMUM EMBEDMENT OF VERTICAL REINFORCING BARS:
IF THE MINIMUM EMBEDMENT SHOWN FOR THE VERTICAL REINFORCING BARS INTO THE BRIDGE DECK, APPROACH SLAB, WINGWALL, OR SIDEWALK IS NOT MET, THEN THE DESIGNER SHALL CALCULATE THE REQUIRED REINFORCEMENT ACCORDING TO SECTION 13 OF THE "AASHTO LRFD BRIDGE DESIGN SPECIFICATIONS" ADOPTED BY THE AMERICAN ASSOCIATION OF STATE HIGHWAY AND TRANSPORTATION OFFICIALS.

METHOD OF MEASUREMENT:
THE DEPARTMENT WILL MEASURE THE QUANTITY BY THE NUMBER OF FEET. THE DEPARTMENT WILL MEASURE THE LENGTH OF RAILING BETWEEN THE ENDS OF THE CONCRETE BARRIER.

BASIS OF PAYMENT:
PAYMENT FOR THE CONCRETE AND REINFORCING STEEL ABOVE OR EXTENDING ABOVE THE UPPER SURFACE OF THE SIDEWALK; SAWCUTS; CAULKING COMPOUND; ANCHOR BOLTS; STEEL PLATES; STEEL POSTS; STEEL TUBE RAILING; STEEL POST CAPS; BOLTS; HEX NUTS AND WASHERS; AND OTHER HARDWARE ARE INCLUDED FOR PAYMENT IN THE UNIT PRICE BID FOR THE MEASURED LENGTH.

FOR BRIDGE SIDEWALK RAILING WITHOUT VANDAL PROTECTION FENCE, THE DEPARTMENT WILL PAY FOR ACCEPTED QUANTITIES AT THE CONTRACT PRICE FOR ITEM 517, FEET, RAILING (CONCRETE PARAPET WITH TWIN STEEL TUBE RAILING).

FOR BRIDGE SIDEWALK RAILING WITH VANDAL PROTECTION FENCE, IN ADDITION TO THE ITEMS LISTED ABOVE, THE DEPARTMENT WILL PAY FOR ACCEPTED QUANTITIES AT THE CONTRACT PRICE FOR ITEM 517, FEET, RAILING (CONCRETE PARAPET WITH TWIN STEEL TUBE RAILING AND VANDAL PROTECTION FENCE) WHICH INCLUDES FABRICATION OF BASE PLATES WITH POST SLEEVES AND HEXAGON SOCKET SET SCREWS.

THE DEPARTMENT WILL PAY FOR ALL REMAINING VANDAL PROTECTION FENCE COMPONENTS SEPARATELY.

NOTES TO DESIGNER:
THIS STANDARD BRIDGE DRAWING IS INTENDED FOR USE WHEN THE APPROACH ROADWAY SECTION CONTAINS A CONCRETE SIDEWALK AND THE APPROACH RAILING IS ON THE OUTSIDE OF THE CONCRETE SIDEWALK. IF THE APPROACH RAILING IS LOCATED AT THE FACE OF THE CURB, THE APPROACH RAILING SHALL RUN CONTINUOUSLY ACROSS THE ENTIRE LENGTH OF THE BRIDGE. IF THE APPROACH ROADWAY SECTION HAS NO RAISED CONCRETE SIDEWALK, THE SIDEWALK THICKNESS SHALL TRANSITION TO THE FULL THICKNESS OF THE CONCRETE SIDEWALK ON THE APPROACH SLAB. TRANSITION FOR THE SIDEWALK THICKNESS SHALL NOT BE PLACED ON THE SUPERSTRUCTURE. IF THE APPROACH RAILING IS OF A DEFLECTOR PARAPET TYPE LOCATED OUTSIDE OF THE CONCRETE SIDEWALK, THE TRANSITION BETWEEN THE TWO DIFFERENT TYPES OF CONCRETE BARRIERS SHALL BE PLACED ON THE APPROACH SLAB AND THIS REQUIRES A SPECIAL DESIGN WHICH IS TO BE FULLY DETAILED IN THE STRUCTURE PORTIONS OF THE PLANS.

THE MINIMUM WIDTH OF THE SIDEWALK ON THE BRIDGE IS FIVE (5) FEET AND THE HEIGHT OF THE SIDEWALK SHALL BE EIGHT (8) INCHES MEASURED AT THE TOE OF THE CURB.

DESIGN AGENCY
OFFICE OF STRUCTURAL ENGINEERING

STATE OF OHIO DEPARTMENT OF TRANSPORTATION
07-17-15
DATE
ADMINISTRATOR

REVISIONS

BR-2-15

STANDARD BRIDGE DRAWING
BRIDGE SIDEWALK RAILING WITH CONCRETE BARRIER

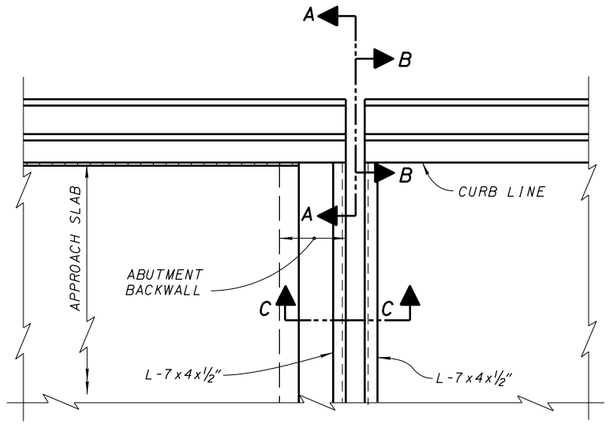

PART PLAN AT ABUTMENT

FOR BRIDGES WITH DEFLECTOR PARAPET RAILING

(BR-1 RAILING SHOWN, SBR-1-99 SHALL BE SIMILAR)

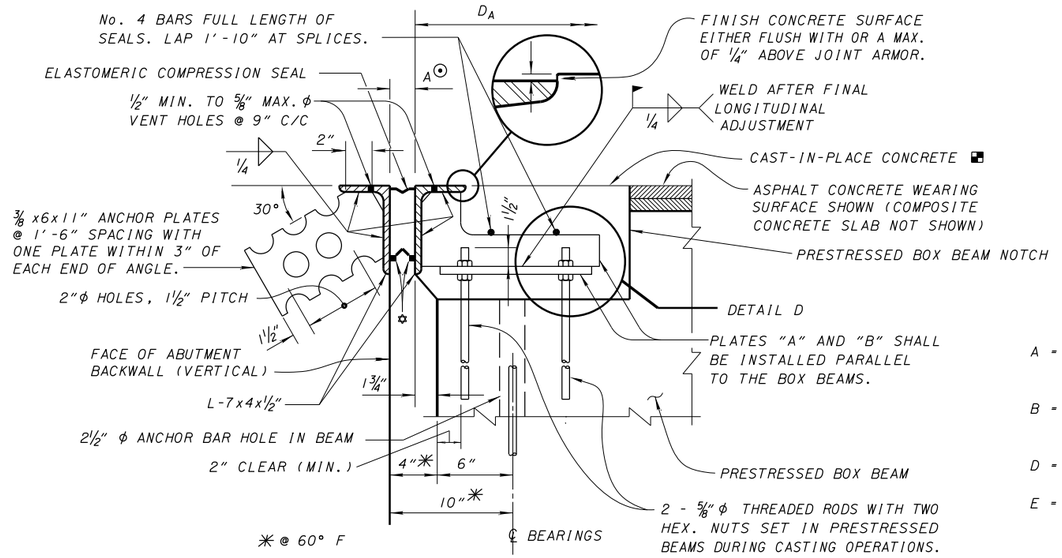

SECTION C-C

WITH ROADWAY GRADIENT OF 2% OR LESS SHOWN

NOTE: FOR DIMENSIONS A⊙, D_A, ADDITIONAL NOTES AND DETAILS SEE SHEET 4 / 4 .

✡ - ½"ø RETAINER BAR

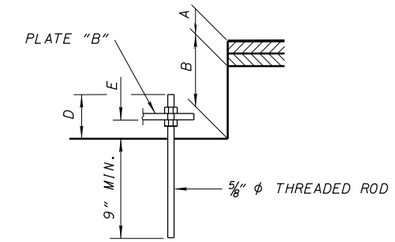

DETAIL D

A = ASPHALT CONCRETE WEARING SURFACE THICKNESS (OR COMPOSITE SLAB THICKNESS) AT NOTCH.

B = 5" NOTCH FOR 17" BEAMS OR 7" NOTCH FOR 21" THRU 42" BEAMS.

D = A + B - 4" (SHALL BE SHOWN ON THE PROJECT PLANS)

E = A + B - 6" (IF DIM. "E" IS LESS THAN 3", A BED OF NON-SHRINK GROUT, CMS 705.22, SHALL BE PLACED AND COMPACTED UNDER EACH PLATE "B" AFTER FINAL VERTICAL ADJUSTMENT.)

◘ - SURFACE TEXTURE ON DECK JOINTS SHALL BE PARALLEL WITH THE JOINT FOR SKEWED BRIDGES WITH ASPHALT CONCRETE WEARING SURFACE. CONCRETE MIN. COMPRESSIVE STRENGTH - 4.5 KSI

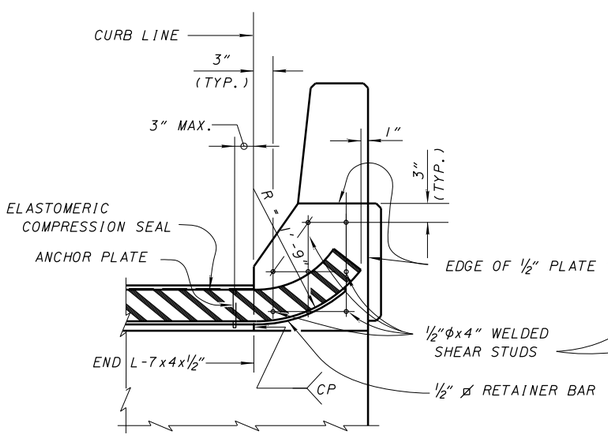

SECTION A-A

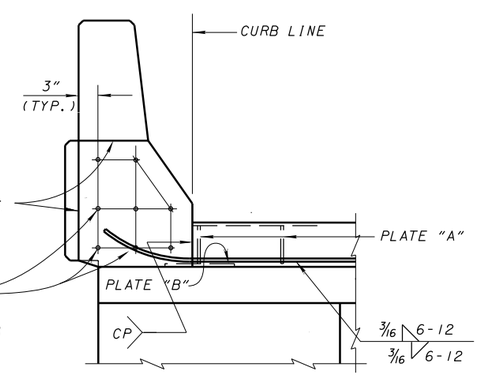

SECTION B-B

LEGEND:

R = RADIUS

SEE SHEET 4 / 4 FOR NOTES AND PLATES A & B

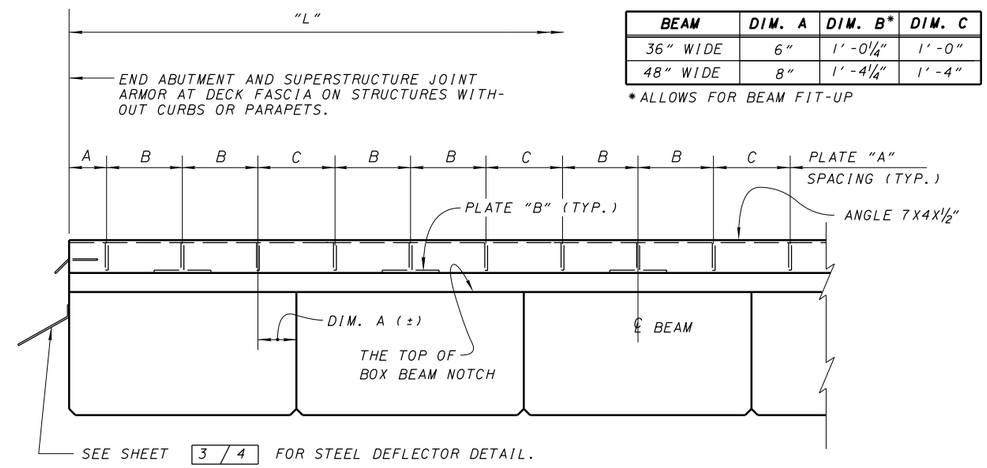

BEAM	DIM. A	DIM. B*	DIM. C
36" WIDE	6"	1'-0¼"	1'-0"
48" WIDE	8"	1'-4¼"	1'-4"

* ALLOWS FOR BEAM FIT-UP

NOTE: WHERE THE TOTAL WIDTH OUT TO OUT OF BOX BEAMS IS EQUAL TO THE BRIDGE ROADWAY WIDTH, JOINT ARMOR SHALL BE OF SUFFICIENT LENGTH TO ALLOW FOR FIT-UP OF BEAMS. SEE FORMULA FOR LENGTH "L".

L = LENGTH OF JOINT, EDGE TO EDGE OF DECK (FEET)
= [(N-1)(½)+N(W)]/(12 COS θ)
N = NUMBER OF BEAMS
W = NOMINAL WIDTH OF BEAMS (INCHES)
θ = SKEW ANGLE OF JOINT

END OF SUPERSTRUCTURE

WITHOUT CURBS OR PARAPETS

DESIGN AGENCY
OFFICE OF STRUCTURAL ENGINEERING

STATE OF OHIO DEPARTMENT OF TRANSPORTATION
11-15-82
DATE
ENGINEER OF BRIDGES

REVIEWED WTL/RLD
CHECKED JS/MPB
DESIGNED RLD/AJM
DRAWN AJM

EXJ-3-82

REVISIONS
08-11-84
02-14-97
04-20-01
07-19-02
01-18-13

STANDARD
COMPRESSION SEAL EXPANSION JOINTS AT ABUTMENTS FOR PRESTRESSED BOX BEAM STRUCTURES

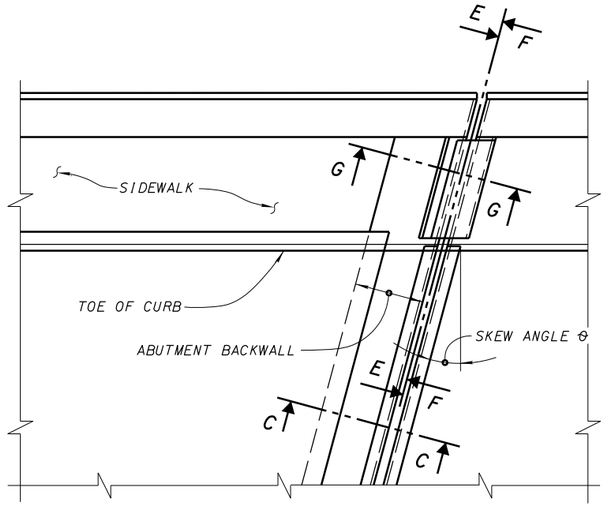

PART PLAN AT ABUTMENT

FOR BRIDGES WITH SIDEWALK PARAPET RAILING

SEE SHEET 1/4 FOR SECTION C-C.

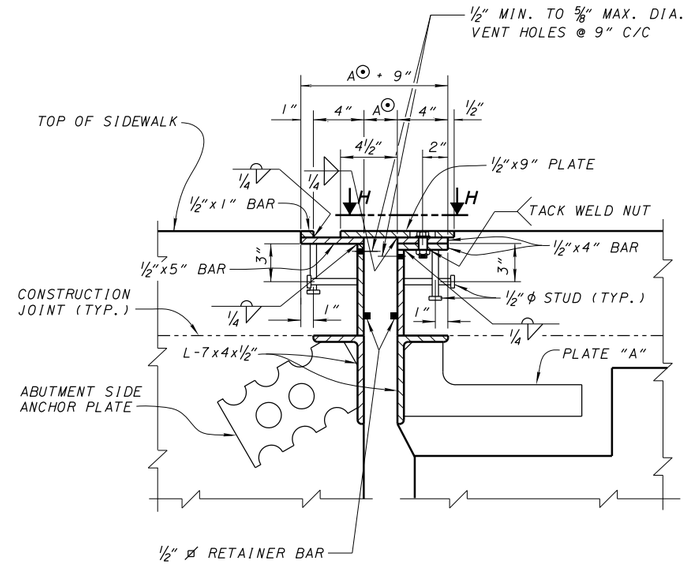

SECTION G-G

NOTE: FOR DIMENSION A⊙, ADDTIONAL NOTES AND DETAILS, SEE SHEET 4/4.

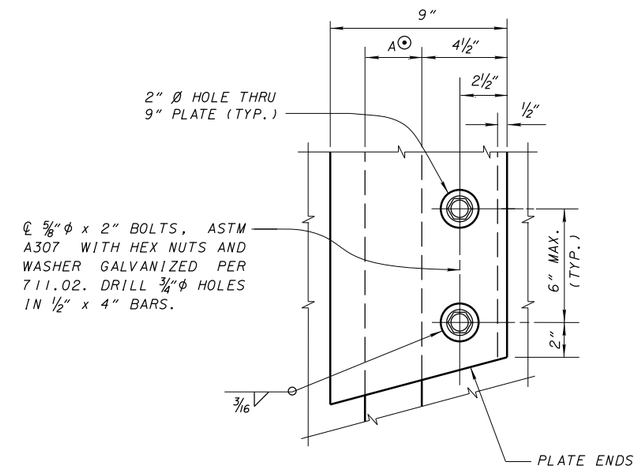

VIEW H-H

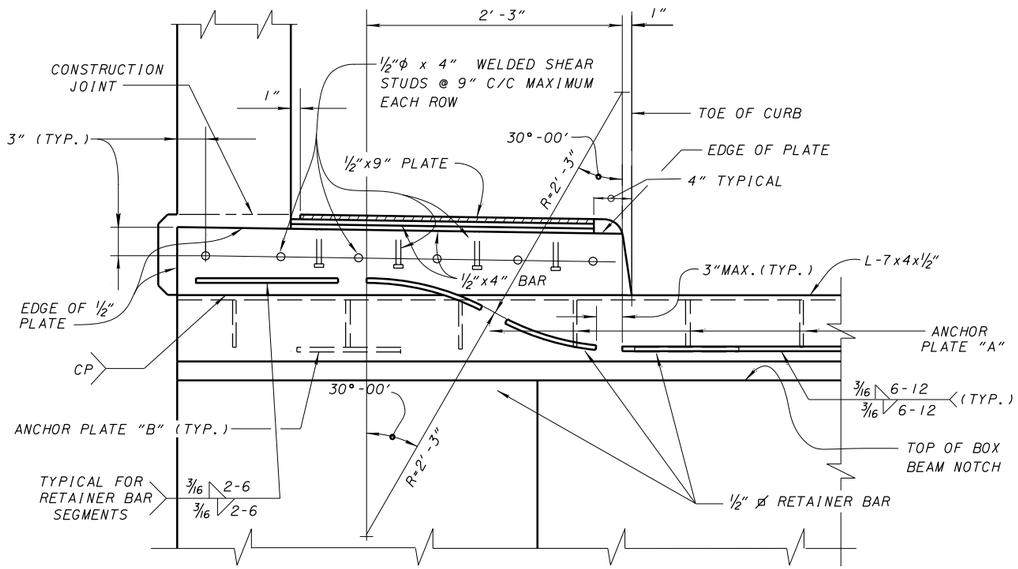

SECTION E-E

SEAL NOT SHOWN

SEE SECTION F-F FOR OTHER DETAILS NOT SHOWN

LEGEND:
R = RADIUS

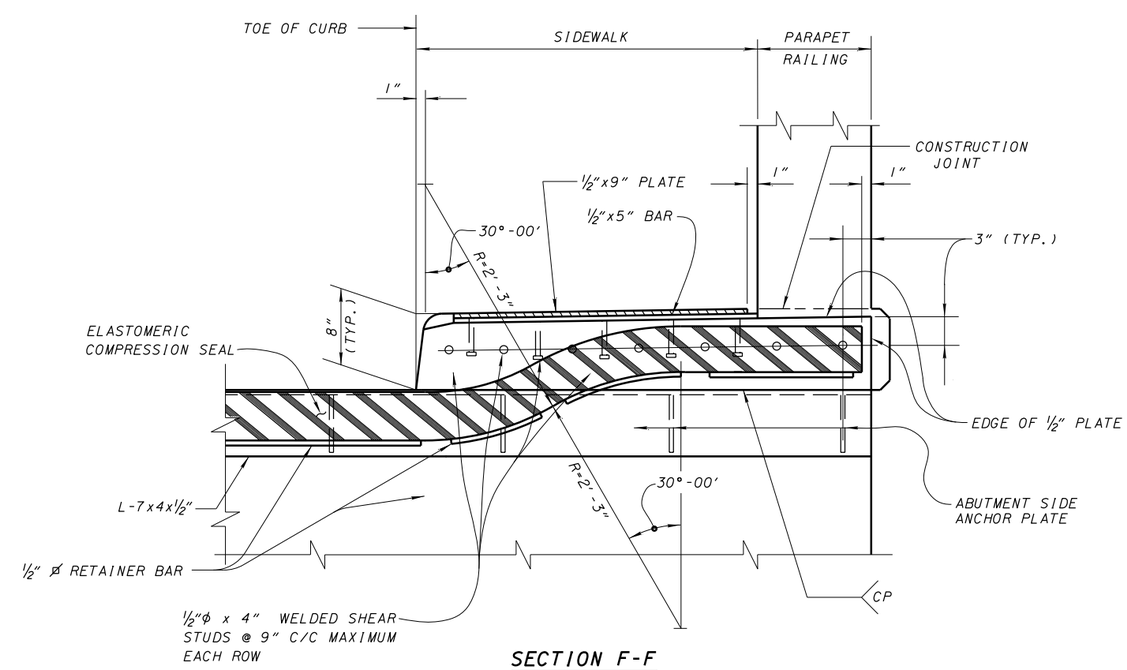

SECTION F-F

SEE SECTION E-E FOR OTHER DETAILS NOT SHOWN

SEE SHEET 4/4 FOR NOTES AND PLATES A & B.

SEE SHEET 1/4 FOR ADDTIONAL DETAILS.

DESIGN AGENCY
OFFICE OF
STRUCTURAL ENGINEERING

STATE OF OHIO DEPARTMENT OF TRANSPORTATION
ENGINEER OF BRIDGES — DATE 11-15-82

REVIEWED	CHECKED	DESIGNED	REVISIONS
WTL/RLD	JS/MPB	RLD/AJM	08-1-84
		DRAWN AJM	02-14-97
			04-20-01
			07-19-02
			01-18-13

EXJ-3-82

STANDARD
COMPRESSION SEAL EXPANSION JOINTS AT ABUTMENTS FOR PRESTRESSED BOX BEAM STRUCTURES

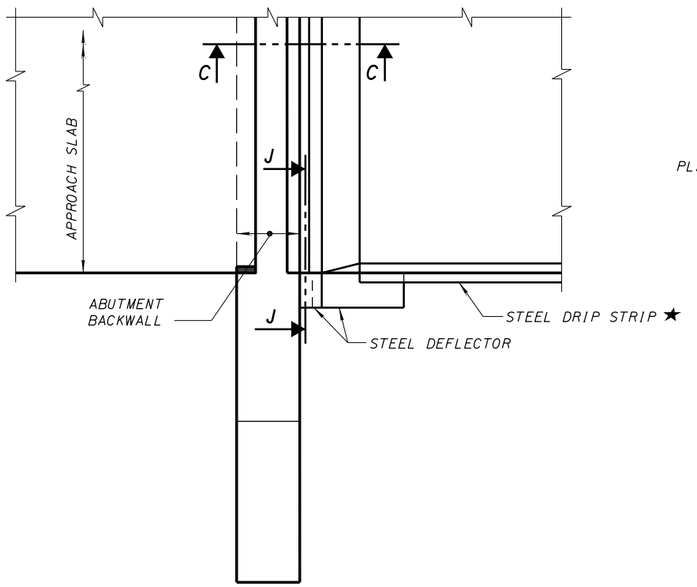

PART PLAN AT ABUTMENT FOR FULL WIDTH STRUCTURES

(SEE SHEET 1 / 4 FOR SECTION C-C)

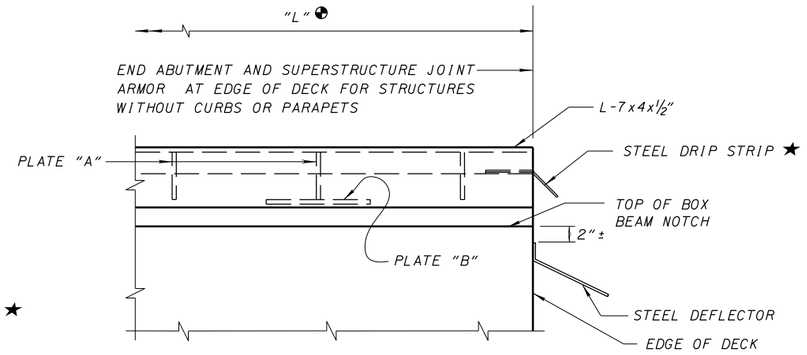

SECTION J-J

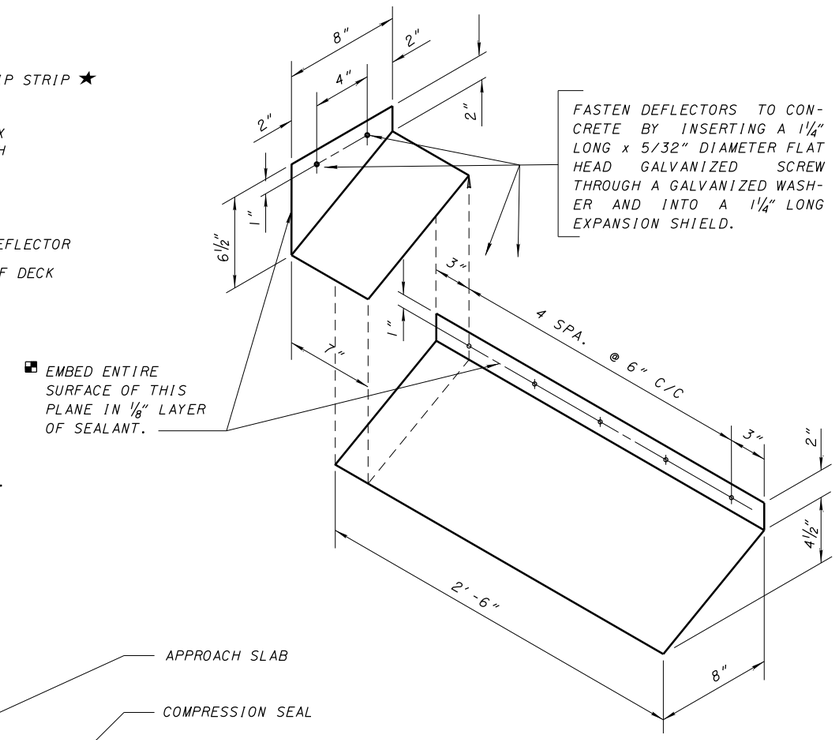

NOTES:

✪ SEE SHEET 1 / 4 FOR DEFINITION OF DIMENSION "L".

■ SEALANT SHALL MEET ASTM C920, TYPE S

★ SEE STEEL DRIP STRIP STANDARD BRIDGE DRAWING (NOT INCLUDED WITH EXPANSION JOINT FOR PAYMENT)

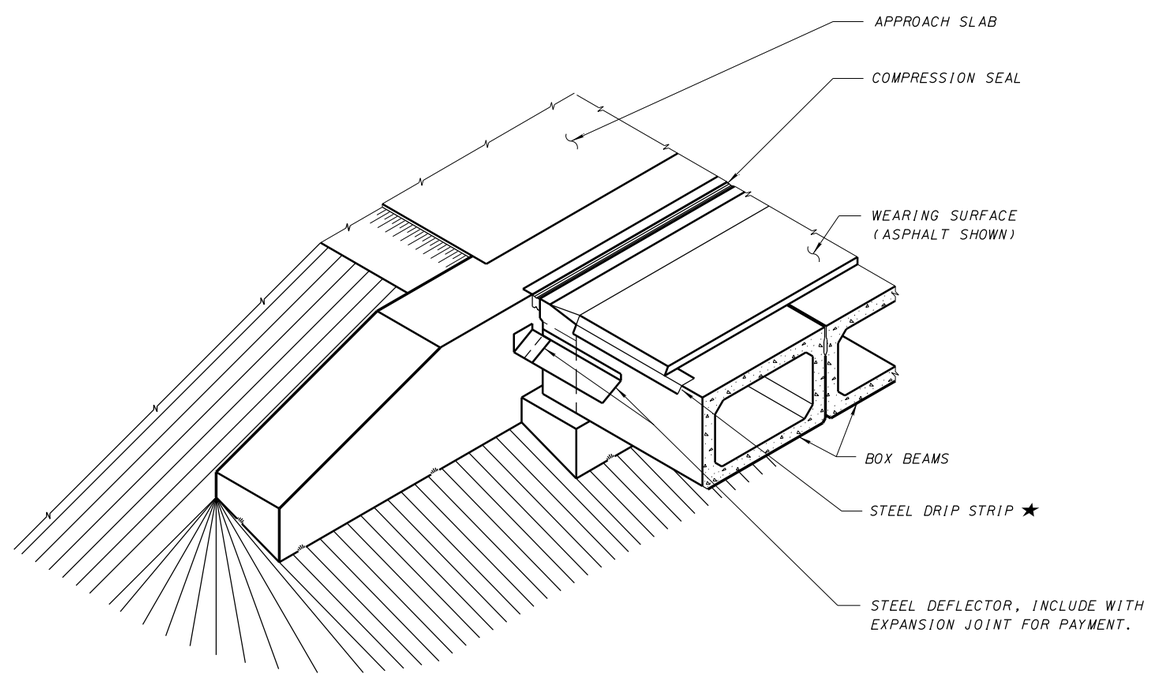

SEE SHEET 4 / 4 FOR NOTES AND PLATES A & B.

DESIGN AGENCY
OFFICE OF STRUCTURAL ENGINEERING

STATE OF OHIO DEPARTMENT OF TRANSPORTATION
11-15-82
DATE
ENGINEER OF BRIDGES

REVIEWED WTL/RLD
CHECKED JS/MPB
DESIGNED RLD/AJM
DRAWN AJM

REVISIONS
08-1-84
02-14-97
04-20-01
07-19-02
01-18-13

STANDARD
COMPRESSION SEAL EXPANSION JOINTS AT ABUTMENTS FOR PRESTRESSED BOX BEAM STRUCTURES

EXJ-3-82

GENERAL NOTES:

COMPRESSION SEAL: FURNISH MATERIAL CONFORMING TO 705.11. THE SEAL CONFIGURATION SHOULD BE SIMILAR TO THE DETAILS SHOWN HEREIN. ACCEPTED MANUFACTURERS ARE: D.S. BROWN (MODEL CV4000), WATSON-BOWMAN-ACME (MODEL WJ400) OR AN APPROVED EQUIVALENT. INSTALL THE SEAL ACCORDING TO THE MANUFACTURER'S SPECIFICATIONS AND UNDER THE SUPERVISION OF THE MANUFACTURER'S DESIGNATED REPRESENTATIVE.

JOINTS IN COMPRESSION SEALS: FURNISH SEALS IN ONE CONTINUOUS PIECE UNLESS OTHERWISE APPROVED BY THE ENGINEER.

ARMOR STEEL: ALL ANGLE SHAPES SHALL BE ASTM A709, GRADE 50 OR 50W. ALL OTHER STEEL PARTS INCLUDING RETAINERS, SHALL BE ASTM A709, GRADE 36, 50 OR 50W.

JOINTS IN ARMOR STEEL: SHOP OR FIELD JOINTS IN THE ARMOR SHALL BE COMPLETE PENETRATION WELDS GROUND FLUSH WHERE IN CONTACT WITH THE SEAL AND THE RETAINER.

ARMOR COATING: COAT ALL STEEL PARTS OF THE JOINT ASSEMBLY ACCORDING TO 516.

TEMPORARY SUPPORTS: THE FABRICATOR SHALL DESIGN AND INSTALL TEMPORARY SUPPORTS TO RESIST SHIPPING, ERECTION AND CONSTRUCTION FORCES WITHOUT DAMAGE TO THE STEEL ARMOR OR COATING. THESE SUPPORTS SHALL BE ADJUSTABLE IN THE FIELD TO ACCOUNT FOR VARIABLE TEMPERATURE SETTINGS. INSTALL THE SUPPORTS AFTER THE FABRICATION AND COATING IS COMPLETE.

STEEL DEFLECTORS: FURNISH 22 GAGE STAINLESS STEEL CONFORMING TO ASTM A240, TYPE 304 OR EQUIVALENT, WITH A NO. 1 FINISH.

NON-SHRINKING GROUT: FURNISH MATERIAL CONFORMING TO 705.22. LIMIT THE BATCH SIZE SUCH THAT PLACEMENT CAN BE COMPLETED WITHIN 30 MINUTES. DO NOT USE MORTAR OLDER THAN 30 MINUTES. DO NOT ADD WATER TO INCREASE FLOWABILITY WHICH HAS BEEN DECREASED BY DELAYED USE OF MORTAR. INCLUDE WITH SUPERSTRUCTURE CONCRETE FOR PAYMENT.

THREADED RODS: FURNISH 5/8" DIAMETER THREADED RODS AND NUTS CONFORMING TO ASTM A709, GRADE 36 OR A307. GALVANIZE ACCORDING TO 711.02. INCLUDE WITH THE BOX BEAMS FOR PAYMENT.

BASIS OF PAYMENT: THE DEPARTMENT WILL PAY FOR CONCRETE PLACED IN THE BOX BEAM NOTCH SEPARATELY UNDER ITEM 511.

CONSTRUCTION PROCEDURE:

1. PLACE JOINT ASSEMBLY SO THE TWO (2) L7x4x1/2" ANGLES REMAIN PARALLEL TO EACH OTHER AND PERPENDICULAR TO THE ROADWAY GRADIENT.
2. FOR STRUCTURES WITH A COMPOSITE CONCRETE WEARING SURFACE, PLACE THE SUPERSTRUCTURE CONCRETE IN THE SPAN ADJACENT TO THE ABUTMENT PRIOR TO THE PLACEMENT OF ABUTMENT BACKWALL CONCRETE.
3. ⊙ NOT MORE THAN FOUR HOURS PRIOR TO THE DAY'S PEAK AMBIENT TEMPERATURE, SET ABUTMENT EXPANSION JOINT WIDTH TO DIMENSION "A" WHICH SHALL BE DETERMINED AS FOLLOWS:

   $A = 2\frac{1}{4}'' \pm D_{TA}$, WHERE:
   A = JOINT WIDTH (INCHES) MEASURED NORMAL TO JOINT
   D_{TA} = ADJUSTMENT (INCHES) FOR A PEAK AMBIENT TEMPERATURE OTHER THAN 60°F (SEE CHART).

4. PLACE THE BACKWALL CONCRETE DURING STABLE OR RISING AMBIENT TEMPERATURES. CONCLUDE PLACEMENT AT OR IMMEDIATELY BEFORE THE DAY'S PEAK AMBIENT TEMPERATURE.
5. HAND PLACE AND VIBRATE CONCRETE UNDER JOINT ARMOR TO ACHIEVE COMPLETE CONSOLIDATION.
6. LOOSEN ANY TEMPORARY JOINT ARMOR SUPPORTS AFTER INITIAL SET OF THE CONCRETE, PREFERABLY NOT LATER THAN TWO HOURS AFTER CONCLUSION OF THE CONCRETE PLACEMENT.
7. FOR STRUCTURES WITH A NONCOMPOSITE ASPHALT WEARING SURFACE, PLACE THE CONCRETE IN THE BOX BEAM NOTCH ACCORDING TO STEP 5 AFTER THE BACKWALL CONCRETE HAS BEEN PLACED. TEXTURE THE SURFACE PARALLEL TO THE JOINT. CONCRETE MIN. COMPRESSIVE STRENGTH - 4.5 KSI

NOTES TO DESIGNER:

DESIGN LIMITS: THIS DESIGN IS INTENDED FOR STRUCTURES WITH SKEW ANGLES NOT GREATER THAN 15°, ROADWAY GRADES OF 2% OR LESS AND D_M (SEE CHART ON THIS SHEET) NOT LARGER THAN 150 FEET.

THE DESIGNER SHALL SUPPLY DETAILS FOR STRUCTURES WITH ROADWAY GRADES GREATER THAN 2%.

ANCHOR BAR HOLES IN ABUTMENT SEATS SHALL BE 2" ϕ UNLESS OTHERWISE SHOWN ON PROJECT PLANS.

COMPRESSION SEALS AT FIXED BEARINGS SHALL BE AS SHOWN WHERE DIMENSION "A" = 2 1/4" AT ANY AMBIENT TEMPERATURE.

PRESTRESSED CONCRETE BOX BEAMS SHALL BE MODIFIED AS FOLLOWS FOR COMPRESSION SEAL INSTALLATION:

1. STIRRUP REINFORCING STEEL IN NOTCHED AREAS AT ENDS OF COMPOSITE BEAMS SHALL NOT PROJECT ABOVE THE TOP OF CONCRETE.
2. ENDS OF FASCIA BEAMS SHALL BE NOTCHED FULL WIDTH OF BEAMS.
3. 12 INCH DEEP BEAMS REQUIRE A SPECIAL DESIGN.
4. HOLES FOR ANCHOR BARS SHALL BE 2 1/2" DIAMETER.
5. BEAM ENDS FOR STRUCTURES ON GRADES OVER 2% SHALL BE MADE VERTICAL.

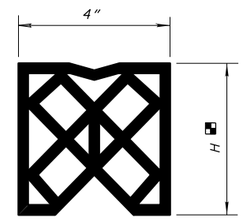

COMPRESSION SEAL DETAIL

■ SEE THE MANUFACTURER'S CATALOGUE FOR THE SEAL ACTUALLY CHOSEN FOR USE.

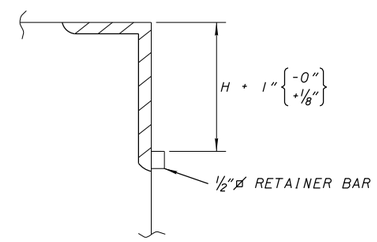

LOCATION OF SEAL RETAINER BARS

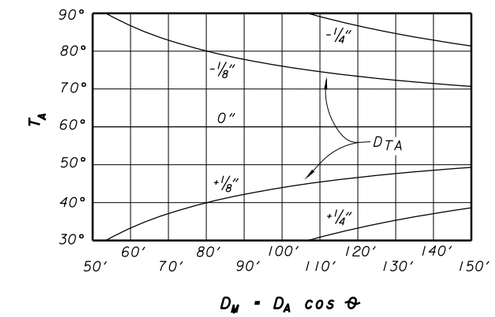

T_A = ANTICIPATED PEAK AMBIENT TEMPERATURE (°F).

D_A = ACTUAL DISTANCE, IN FEET, TO THE THERMAL NEUTRAL EXPANSION POINT OF THE SUPERSTRUCTURE ALONG THE CENERLINE OF THE ROADWAY. THE THERMAL NEUTRAL POINT OF THE SUPERSTRUCTURE IS THE POINT THAT HAS ZERO HORIZONTAL MOVEMENT DURING TEMPERATURE CHANGES.

D_M = MODIFIED DISTANCE FOR DETERMINING JOINT ADJUSTMENT (FEET).

θ = SKEW ANGLE OF EXPANSION JOINT.

DIMENSION "A" ADJUSTMENT D_{TA}

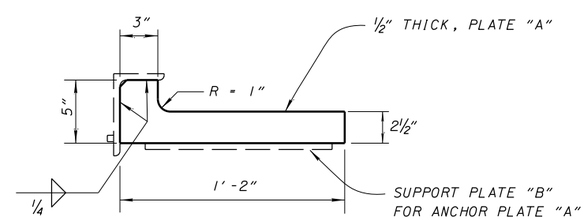

ARMOR ANCHOR PLATE "A"

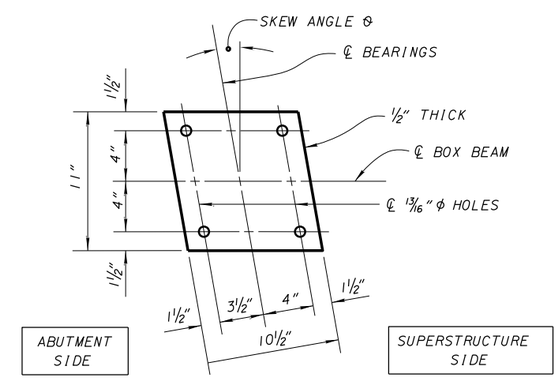

PLATE "B" PLAN

DESIGN AGENCY
OFFICE OF STRUCTURAL ENGINEERING

STATE OF OHIO DEPARTMENT OF TRANSPORTATION
ENGINEER OF BRIDGES — DATE 11-15-82

DESIGNED	DRAWN	CHECKED	REVIEWED
RLD/AJM	AJM	JS/MPB	WTL/RLD

EXJ-3-82

REVISIONS
08-1-84
02-14-97
04-20-01
07-19-02
01-18-13

STANDARD
COMPRESSION SEAL EXPANSION JOINTS AT ABUTMENTS FOR PRESTRESSED BOX BEAM STRUCTURES

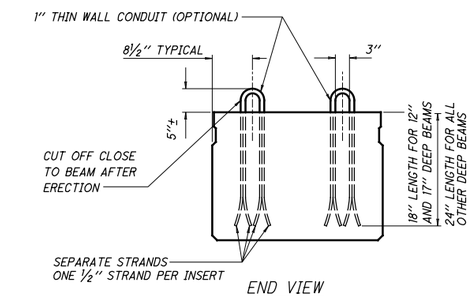

END VIEW

NOTE: ALL LIFTING INSERTS MUST BE UNIFORMLY ENGAGED DURING HANDLING.

FOR SHALLOW BEAMS BEND LOWER ENDS OF INSERTS TOWARD MIDSPAN TO MAINTAIN MINIMUM COVER OF 1¾"

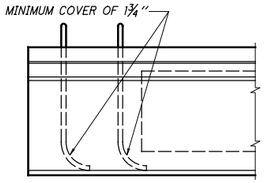

ELEVATION

NOTE: AN ALTERNATE LIFTING INSERTS DESIGN CONFORMING TO ITEM 515 MAY BE USED.

SHIFT LIFTING INSERTS SLIGHTLY WHERE NECESSARY TO CLEAR REINFORCEMENT OR ANCHOR DOWEL HOLES.

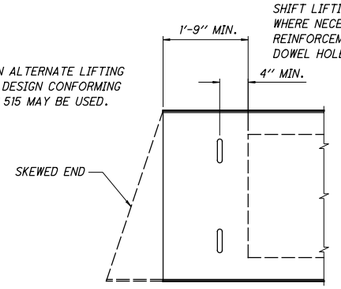

FOR 12", 17" AND 21" DEEP BEAMS

PLAN

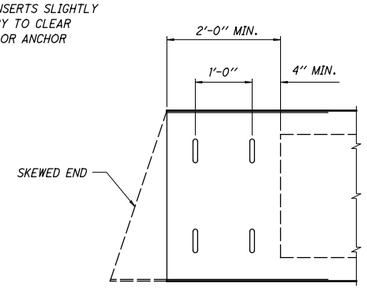

FOR 27", 33" AND 42" DEEP BEAMS

PLAN

BEAM LIFTING INSERTS AT PIER

REFER TO RAILING STANDARD BRIDGE DRAWINGS FOR ADDITIONAL RAILING DETAILS.
REINFORCEMENT NOT SHOWN.

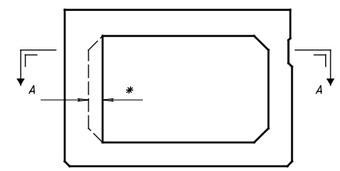

SECTION SHOWING WALL THICKENING AT RAILING ANCHORS

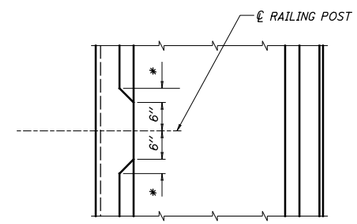

* THIS DIMENSION SAME AS WIDTH OF FILLET IN VOID.

SECTION A-A

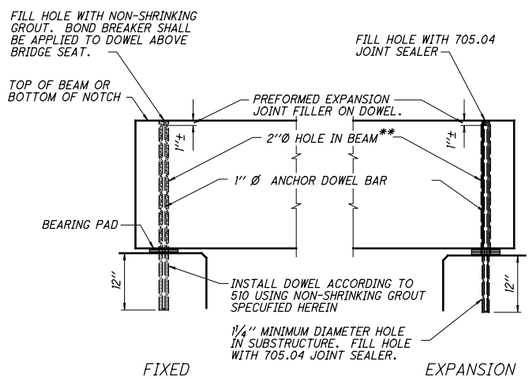

FIXED EXPANSION

** PROVIDE 2½" Ø HOLE IN BEAM WHEN USING COMPRESSION SEAL EXPANSION JOINT ACCORDING TO STANDARD BRIDGE DRWG. EXJ-3-82

ANCHOR DOWELS

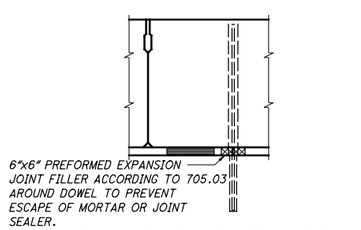

DOWEL CLEARS ELASTOMERIC BEARING

END VIEW

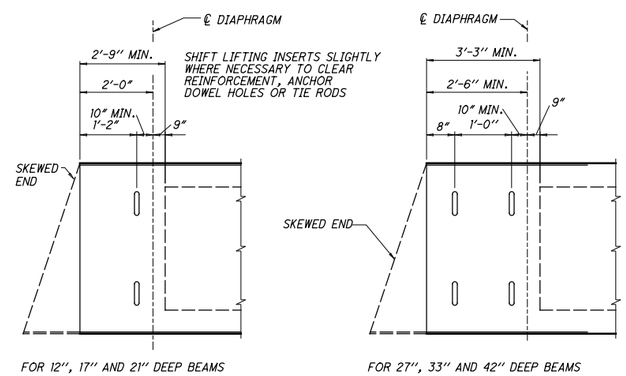

FOR 12", 17" AND 21" DEEP BEAMS

PLAN

FOR 27", 33" AND 42" DEEP BEAMS

PLAN

BEAM LIFTING INSERTS AT ABUTMENT

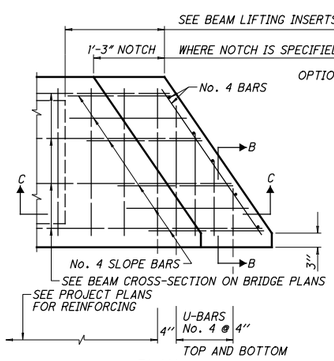

PLAN

INTERIOR BEAM WITH NOTCH AND INTERIOR/EXTERIOR BEAM WITHOUT NOTCH SHOWN. SEE ALTERNATE PLAN FOR FASCIA BEAM WITH NOTCH.

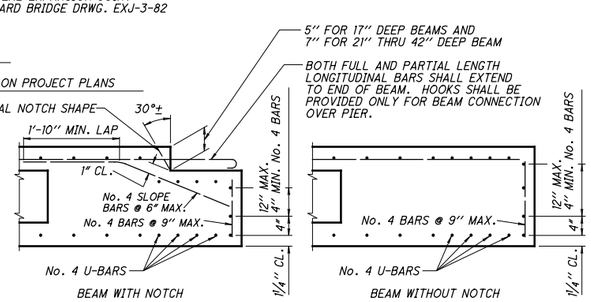

SECTION C-C

DETAILS AND REINFORCEMENT OF BEAM ENDS

NOTE: THE FABRICATOR'S SHOP DRAWINGS SHALL SHOW COMPLETE DETAILS OF THE BEAM REINFORCING.

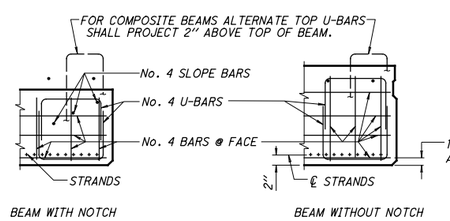

SECTION B-B

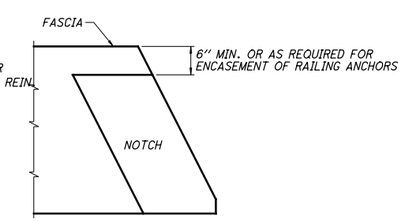

PLAN-FASCIA BEAM WITH NOTCH

GENERAL NOTES:

GENERAL: THIS STANDARD DRAWING PROVIDES DESIGN AND GENERAL CONSTRUCTION DETAILS FOR PRESTRESSED CONCRETE BOX BEAM BRIDGES. THE DETAILS IN THIS STANDARD ARE APPLICABLE TO STRUCTURES WITH SKEW ANGLES OF 30° OR LESS. AS A MINIMUM, THE PROJECT PLANS FOR EACH STRUCTURE SHALL INCLUDE THE FOLLOWING DETAILS:

1. THE DESIGNER SHALL CHOOSE A 28-DAY CONCRETE STRENGTH BETWEEN 5500 PSI AND 7000 PSI; A RELEASE STRENGTH BETWEEN 4000 PSI AND 5000 PSI; AND A NOMINAL STRAND AREA OF 0.153 IN^2 OR 0.167 IN^2. THE DESIGNER SHALL USE THESE VALUES IN THE DESIGN AND LIST THESE VALUES IN THE STRUCTURE GENERAL NOTES.
2. A BEAM LAYOUT PLAN SHOWING: SPAN LENGTH; BEAM LENGTH; SKEW ANGLE; FIXED AND EXPANSION ENDS OF BEAMS; LOCATION OF ANCHOR DOWELS; SIZE, LOCATION AND HARDNESS OF ELASTOMERIC BEARING PADS; LOCATION OF DIAPHRAGM CENTERLINES; AND LOCATIONS OF RAILING POSTS.
3. A TRANSVERSE CROSS SECTION THROUGH THE DECK.
4. A BEAM ELEVATION/LONGITUDINAL CROSS SECTION SHOWING THE STIRRUP SPACING AND VARIABLE TOPPING THICKNESS IN SUFFICIENT DETAIL.
5. A CROSS SECTION OF THE BEAM SHOWING BEAM TYPE AND AND SIZE; SIZE, NUMBER, STRENGTH AND LOCATION OF STRANDS; DEBONDED STRAND REQUIREMENTS; ALL REINFORCING STEEL DETAILS; AND THE DESIGN DATA.
6. EXPANSION JOINT DETAILS.
7. ALL PLAN QUANTITY PAY ITEMS REQUIRED TO PROPERLY COVER THE COST OF FABRICATION, ERECTION AND CONSTRUCTION OF THE BEAMS.
8. DETAILS OF ABUTMENTS AND PIERS.
9. SEALING OF CONCRETE SURFACE LIMITS AND SEALER TYPE.
10. ALL OTHER DETAILS AND INFORMATION NECESSARY TO COMPLETE THE PLANS.

IT IS NOT INTENDED THAT DETAILS SHOWN ON THIS STANDARD DRAWING BE REPEATED ON THE PROJECT PLANS EXCEPT AS MAY BE REQUIRED FOR CLARITY.

DESIGN STRESSES:

PRESTRESSED CONCRETE - F'C = * (28-DAY)

F'Ci = ** (RELEASE)

CAST-IN-PLACE CONCRETE - F'C = 4500 PSI

REINFORCING STEEL - MIN. YIELD STRENGTH = 60,000 PSI. ALL REINFORCING STEEL IN THE COMPOSITE SLAB AND BARS PROJECTING FROM THE PRESTRESSED BOX BEAMS SHALL CONFORM TO 709.00.

PRESTRESSING STRAND - FURNISH MATERIAL CONFORMING TO 711.27 (ASTM A416), GRADE 270, LOW RELAXATION, UNCOATED, SEVEN WIRE STRAND. STRANDS SHALL BE 0.5 INCH DIAMETER WITH A TOTAL CROSS-SECTIONAL AREA OF EITHER 0.153 IN^2 OR 0.167 IN^2 ***

* - THE DESIGNER SHALL SPECIFY A 28-DAY COMPRESSIVE STRENGTH IN THE RANGE OF 5500 PSI MINIMUM TO 7000 PSI MAXIMUM AND LIST THE VALUE IN THE STRUCTURE'S GENERAL NOTES.

** - THE DESIGNER SHALL SPECIFY A RELEASE STRENGTH IN THE RANGE OF 4000 PSI MINIMUM TO 5000 PSI MAXIMUM AND LIST THE VALUE IN THE STRUCTURE'S GENERAL NOTES.

*** - THE DESIGNER SHALL SPECIFY THE STRAND AREA IN THE STRUCTURE'S GENERAL NOTES.

TRANSVERSE TIE RODS SHALL BE 1" DIAMETER STEEL RODS CONFORMING TO ASTM A311, GRADE 1018, AND THREADED AT EACH END. PROVIDE A NUT AND WASHER AT EACH END. THREADS MAY BE CUT OR ROLLED. IF ROLLED THREADS ARE USED, THE MINIMUM DIAMETER AT THE ROOT OF THE THREADS SHALL BE 0.838". INSTALL AND TORQUE RODS TO APPROXIMATELY 250 FT-LBS. AFTER TIGHTENING, FILL THE RECESSES IN THE FASCIA BEAMS WITH NON SHRINK MORTAR OF THE SAME COLOR AS THE BEAM. TIE NO MORE THAN THREE BEAMS TOGETHER WITH ONE TRANSVERSE TIE ROD.

GALVANIZING: GALVANIZE ANCHOR DOWEL BARS, INSERTS, TIE RODS, NUTS AND WASHERS ACCORDING TO 711.02.

ANCHOR DOWELS SHALL BE 1" DIAMETER SMOOTH STEEL RODS RODS CONFORMING TO ASTM A311, GRADE 1018. THE DESIGNER SHALL INDICATE ON THE PLANS WHICH BEAM ENDS ARE TO BE ANCHORED AND IF THE ANCHOR IS FIXED OR EXPANSION. LOCATE THE ANCHOR DOWEL HOLES AND PRESTRESSING STRANDS TO AVOID MUTUAL INTERFERENCE. THE LATERAL SPACING OF THE HOLES IN THE BEAM SHALL BE SUCH THAT THE ANCHOR DOWELS CLEAR THE ELASTOMERIC BEARING AND ARE AS CLOSE TO THE CENTERLINE OF BEAM AS POSSIBLE.

AFTER TENSIONING OF THE TRANSVERSE TIE RODS, DRILL 1 1/16" MINIMUM DIAMETER DOWEL HOLES FOR FIXED DOWELS OR 1¼" MINIMUM DIAMETER HOLES FOR EXPANSION DOWELS INTO THE ABUTMENT OR PIER SEAT. CLEAN AND DRY DOWEL HOLES AND INSTALL DOWELS.

ELASTOMERIC BEARINGS: FOUR ELASTOMERIC BEARINGS ARE REQUIRED PER BEAM. POSITION AS SHOWN ON SHEET 4 OF 4.

PREFORMED BEARING PADS: WHERE THE ENGINEER DEEMS THAT SHIMS ARE REQUIRED, INSTALL PREFORMED BEARING PADS, 711.21, ⅛" THICK AND OF THE SAME PLAN DIMENSIONS AS THE ELASTOMERIC BEARINGS.

BEAM ENDS: FIELD APPLY ITEM 512 TYPE B WATERPROOFING TO THE BOX BEAM ENDS THAT ARE NOT COMPLETELY ENCASED IN CONCRETE. SEAL ALL STRANDS WITH A SHOP APPLIED TYPE E WATERPROOFING PER 512.08. WATERPROOFING SHALL EXTEND A MINIMUM OF 2 INCHES SURROUNDING EACH STRAND END.

NOTCHES: PROVIDE NOTCHES IN THE BEAM ENDS AT ABUTMENTS TO ACCOMMODATE EXPANSION JOINT ANCHORAGES AS SHOWN ON STANDARD BRIDGE DRAWINGS EXJ-3-82 AND EXJ-5-93 AND AT PIERS TO ACCOMMODATE CONTINUITY AS SHOWN ON SHEET 4 OF 4.

DRIP GROOVES ON THE UNDERSIDE OF THE FASCIA BEAM ARE NOT PERMITTED.

SURFACE PREPARATION FOR MORTAR: THE FABRICATOR SHALL SANDBLAST THE KEYWAY SURFACES WITHIN FOUR DAYS OF SHIPMENT TO THE PROJECT SITE. THE SANDBLASTING SHALL YIELD A VISUAL APPEARANCE AND TEXTURE EQUAL OR ROUGHER THAN 100 GRIT SANDPAPER OVER THE ENTIRE KEYWAY SURFACE. WHEN STAINS ARE VISIBLE BEFORE BLASTING THE CONCRETE, USE A DEGREASER TO ENSURE REMOVAL OF GREASE, OILS AND OTHER SIMILAR CONTAMINATES. THE DEGREASER SHALL BE WATER SOLUBLE SO IT CAN BE REMOVED BEFORE THE BLASTING BEGINS. BEFORE MORTARING, REMOVE ALL DIRT, DUST, GREASE, OIL AND OTHER FOREIGN MATERIAL FROM THE SURFACES USING A HIGH PRESSURE WASH OF AT LEAST 1000 PSI AT A DELIVERY RATE OF AT LEAST 4 GAL/MIN.

MORTAR:
MORTAR OR GROUT FOR TIE ROD RECESSES, ANCHOR DOWEL HOLES AND KEYWAYS BETWEEN PRESTRESSED CONCRETE BOX BEAMS, SHALL BE A NON-SHRINK TYPE AS DESCRIBED IN THE ALTERNATES BELOW. DURING THE GROUTING OPERATION, PREPARE AT LEAST THREE, 3" DIAMETER BY 6" LONG TEST CYLINDERS OF THE GROUTING MATERIAL. SUBMIT THE CYLINDERS TO THE LABORATORY TO DETERMINE THE MINIMUM COMPRESSIVE STRENGTH OF THE GROUT.

ALTERNATE 1 - OPEN TO TRAFFIC LATER THAN 7 DAYS AFTER GROUTING:

FURNISH MORTAR CONFORMING TO 705.22 OR TO PROPOSAL NOTE FOR HIGH EARLY STRENGTH KEYWAY GROUT. AFTER THE TIE RODS ARE TIGHTENED, PREPARE PLACE AND CURE THE MORTAR ACCORDING TO THE MANUFACTURER'S SPECIFICATIONS. PLACE MORTAR IN A MANNER THAT ENSURES COMPLETE AND SOLID FILLING. THE MINIMUM STRENGTH OF THE MORTAR SHALL BE 5000 PSI BEFORE CONSTRUCTION OR VEHICULAR TRAFFIC IS ALLOWED ON THE BEAMS.

ALTERNATE 2 - PART WIDTH CONSTRUCTION OR OPEN TO TRAFFIC WITHIN 7 DAYS AFTER GROUTING:

FURNISH MORTAR CONFORMING TO PROPOSAL NOTE FOR HIGH EARLY STRENGTH GROUT. AFTER THE TIE RODS ARE TIGHTENED, PREPARE, PLACE AND CURE THE MORTAR ACCORDING TO THE MANUFACTURER'S SPECIFICATIONS. PLACE MORTAR IN A MANNER THAT ENSURES COMPLETE AND SOLID FILLING. THE MINIMUM STRENGTH OF THE MORTAR SHALL BE 5000 PSI BEFORE CONSTRUCTION OR VEHICULAR TRAFFIC IS ALLOWED ON THE BEAMS.

COMPOSITE BRIDGES:

1. SURFACE PREPARATION: THOROUGHLY CLEAN THE TOP SURFACE OF THE BEAMS OF ALL DIRT, DUST AND OTHER FOREIGN MATERIALS WITH WATER, AIR UNDER PRESSURE OR ANY OTHER METHOD THAT PRODUCES SATISFACTORY RESULTS. THOROUGHLY DRENCH THE SURFACE WITH CLEAN WATER. BEFORE PLACING THE CONCRETE, ALLOW THE SURFACE TO DRY TO A DAMP CONDITION.
2. SLAB PLACEMENT: COMPOSITE SLAB POURS ON MULTISPAN SPAN BRIDGES SHALL BE AS LONG AS PRACTICAL. IF NECESSARY, PLACE CONSTRUCTION JOINTS NEAR MIDSPAN, PERPENDICULAR TO THE CENTERLINE OF THE ROADWAY. WHEN STRUCTURAL EXPANSION JOINTS ARE LOCATED AT THE PIERS, PLACE COMPOSITE SLAB BETWEEN THESE JOINTS WITHOUT ADDITIONAL CONSTRUCTION JOINTS EXCEPT AS NOTED IN 511.

BASIS OF PAYMENT: ALL COSTS ASSOCIATED WITH FURNISHING AND INSTALLING THE KEYWAY GROUT, THE ANCHOR DOWELS AND THE PREFORMED EXPANSION JOINT FILLER BETWEEN THE BEARINGS, IS CONSIDERED INCIDENTAL TO THE BOX BEAMS.

THE DEPARTMENT WILL PAY FOR FURNISHING AND INSTALLING TYPE B WATERPROOFING SEPARATELY.

STATE OF OHIO DEPARTMENT OF TRANSPORTATION

T. Keller
ADMINISTRATOR

10-19-07
DATE

REVISIONS
01-21-11
07-20-18

DESIGNED	CHECKED
MRG/SAM	WLF/SEM
DRAWN	REVIEWED
REF	LMW

OFFICE OF STRUCTURAL ENGINEERING

STANDARD BRIDGE DRAWING
PRESTRESSED CONCRETE BOX BEAM BRIDGE DETAILS

SCD NUMBER
PSBD-2-07

1 / 4

I:\br\bridstds\english\revisions\07-20-18\Final Drawings\PSBD-2-07\psbd207_07-20-18.dgn 6/18/2018 10:29:09 AM smeddles

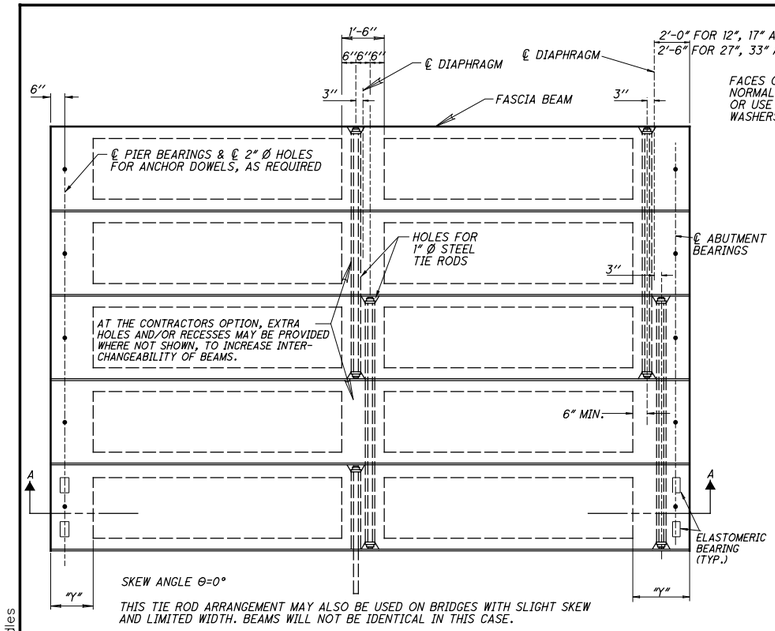

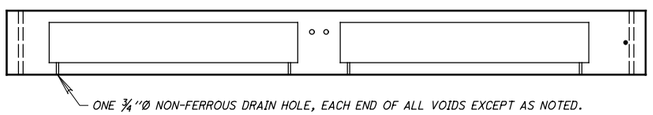

SECTION A-A

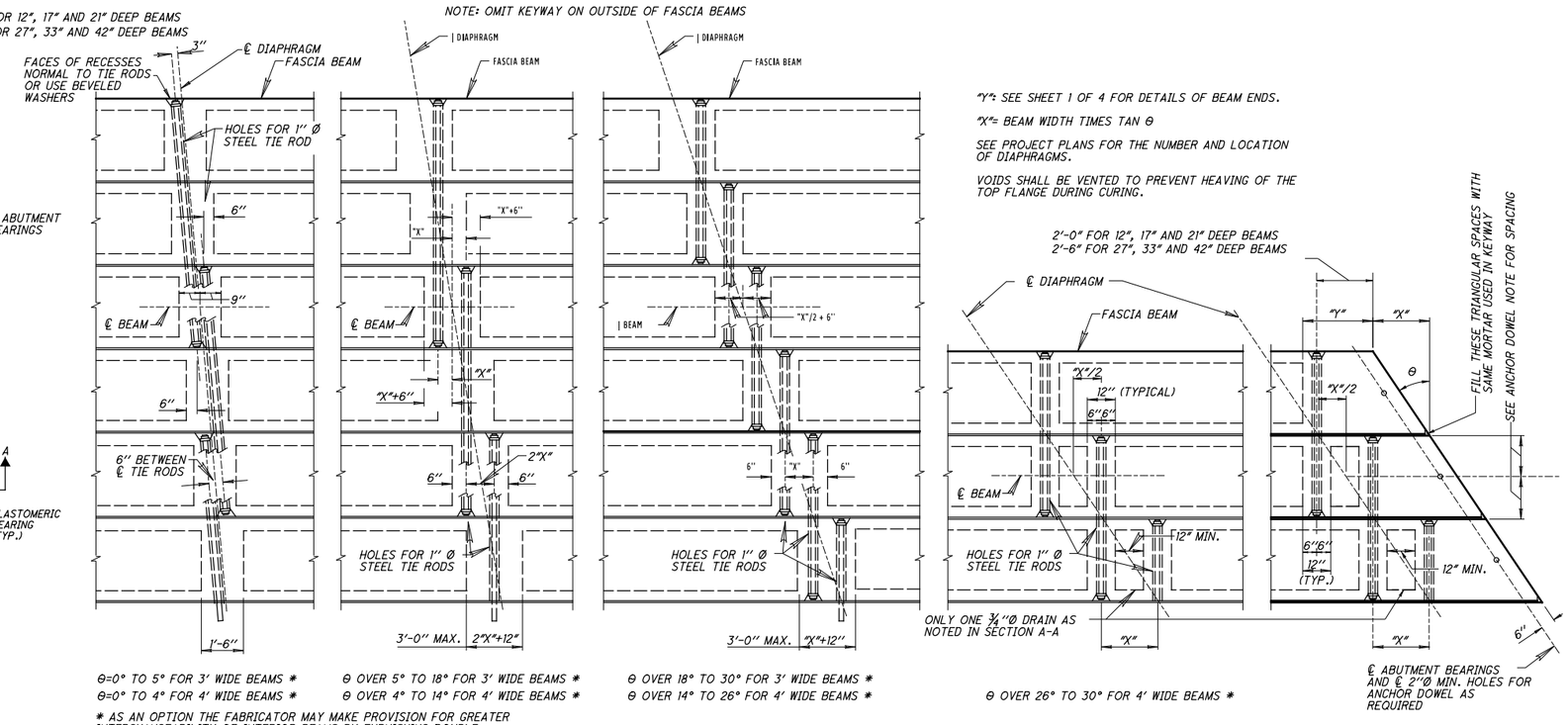

TYPICAL PLANS OF DIAPHRAGMS AND TRANSVERSE TIE RODS

DIAPHRAGM PLACEMENT

PROVIDE INTERMEDIATE DIAPHRGAMS AS FOLLOWS:
SPAN ≤ 50'-0", ONE DIAPHRAGM
50'-0" < SPAN ≤ 75'-0", TWO DIAPHRAGMS
SPAN > 75'-0", THREE DIAPHRAGMS

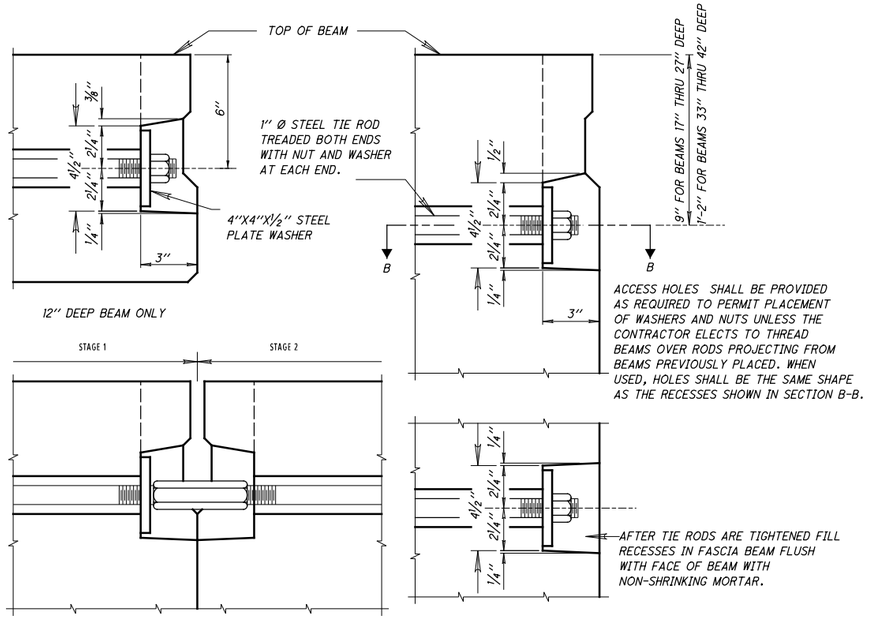

SECTION B-B
(ALL BEAMS)

END DETAILS OF TRANSVERSE TIE ROD ANCHORAGE

HOLES IN BEAMS FOR TRANSVERSE TIE RODS SHALL BE NOT LESS THAN 2"Ø AND NOT MORE THAN 3"Ø.

DIMENSIONS OF RECESSES IN FASCIA BEAMS AND SHEAR KEYS AND VERTICAL LOCATION OF TRANSVERSE TIE RODS MAY VARY FROM THE DIMENSIONS SHOWN HEREON, SUBJECT TO APPROVAL BY THE DIRECTOR.

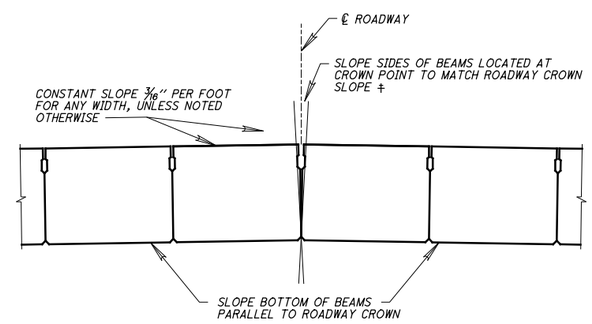

JOINT AT ℄ ROADWAY

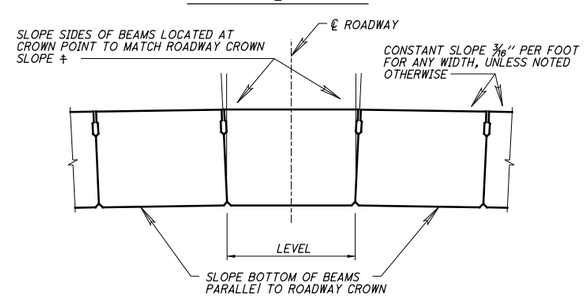

JOINT OFFSET FROM ℄ ROADWAY

‡ REQUIRED ONLY FOR ROADWAY CROWN SLOPES OF ¼" PER FOOT OR GREATER.

NORMAL CROWN TREATMENT AT ℄ ROADWAY

STATE OF OHIO DEPARTMENT OF TRANSPORTATION
10-19-07
DATE
ADMINISTRATOR

REVISIONS
01-21-11
07-20-18

DESIGNED	CHECKED
MRG/SAM	WLF/SEM
DRAWN	REVIEWED
REF	LMW

OFFICE OF STRUCTURAL ENGINEERING

STANDARD BRIDGE DRAWING
PRESTRESSED CONCRETE BOX BEAM BRIDGE DETAILS

SCD NUMBER
PSBD-2-07

I:\br\bridstds\english\revisions\07-20-18\Final Drawings\PSBD-2-07\psbd207_07-20-18.dgn 6/18/2018 10:29:48 AM smeddles

* - TWO BOTTOM REINFORCING BARS (NO. 5 FULL LENGTH) SHALL BE LOCATED AS SHOWN. IF NECESSARY, A LAP OF 3'-3" SHALL BE LOCATED WITHIN THE OUTER QUARTER OF THE SPAN.

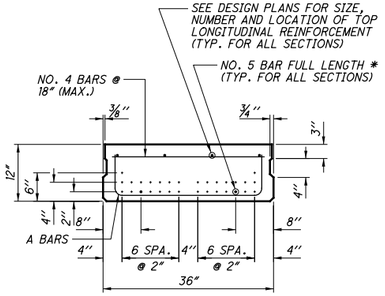

B12-36

(STRAND PATTERN TYPICAL FOR ALL 36" WIDE BEAMS)

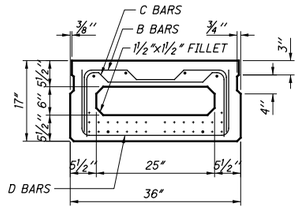

B17-36

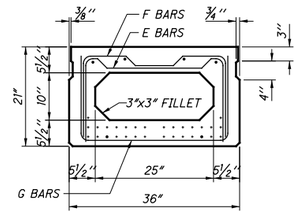

B21-36

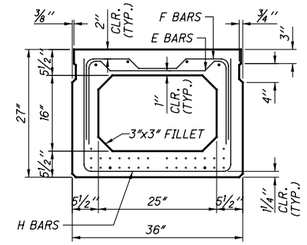

B27-36

36" WIDE NON-COMPOSITE BEAMS

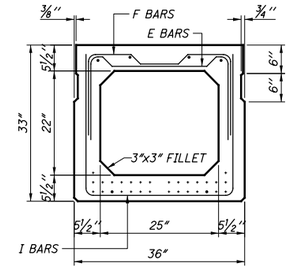

B33-36

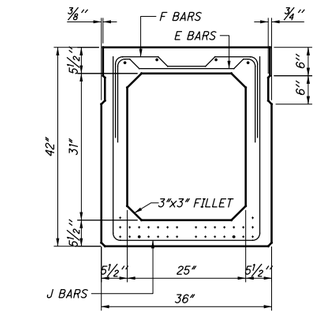

B42-36

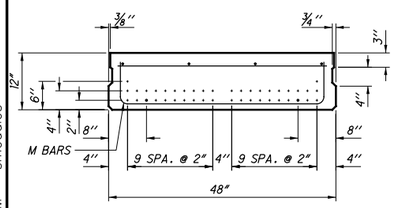

B12-48

(STRAND PATTERN TYPICAL FOR ALL 48" WIDE BEAMS)

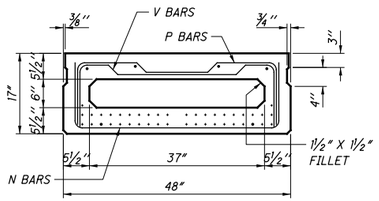

B17-48

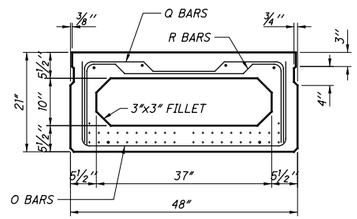

B21-48

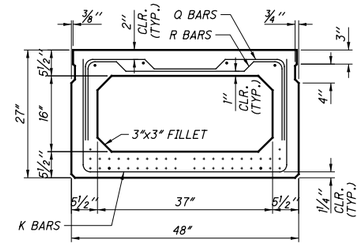

B27-48

48" WIDE NON-COMPOSITE BEAMS

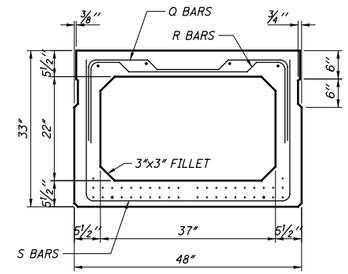

B33-48

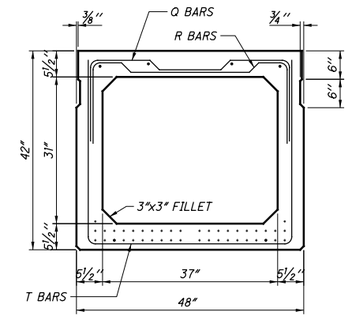

B42-48

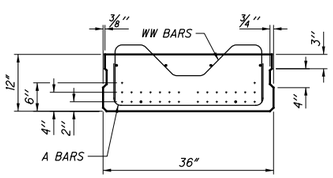

CB12-36

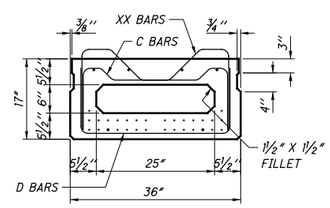

CB17-36

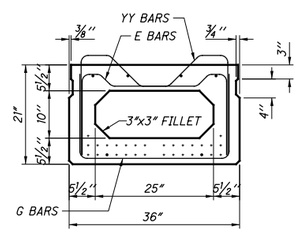

CB21-36

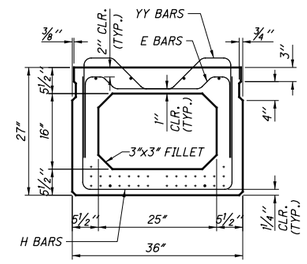

CB27-36

36" WIDE COMPOSITE BEAMS

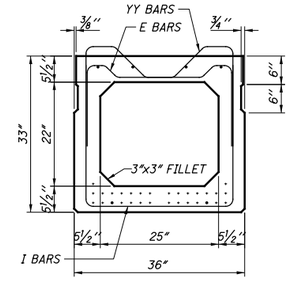

CB33-36

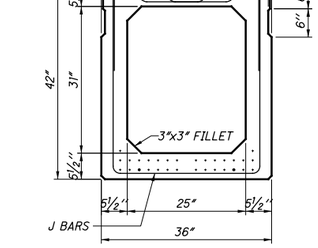

CB42-36

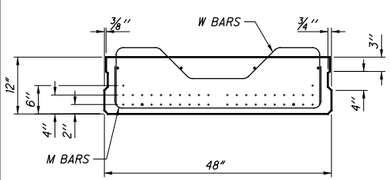

CB12-48

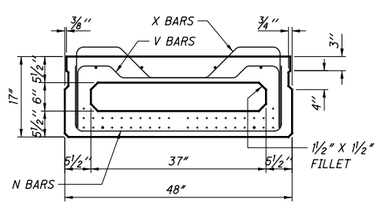

CB17-48

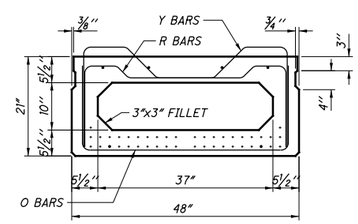

CB21-48

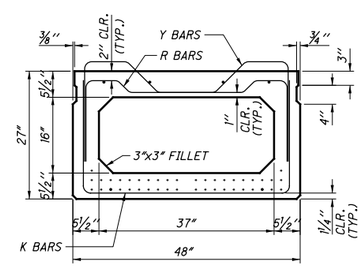

CB27-48

48" WIDE COMPOSITE BEAMS

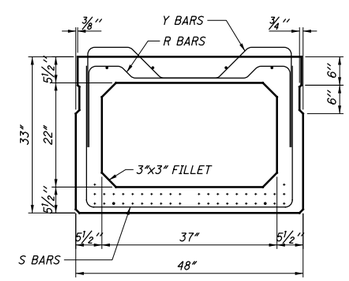

CB33-48

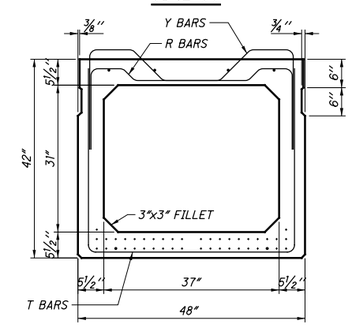

CB42-48

NOTES:

1. STRANDS SHALL BE PLACED AS SHOWN AND SHALL BE DISTRIBUTED SYMMETRICALLY OVER THE BEAM WIDTH. STRAND PATTERN AND THE DEBOND LENGTH SHALL BE SYMMETRICAL ABOUT THE VERTICAL ℄ OF THE BEAM. DEBONDED STRANDS SHALL BE IN THE BOTTOM LAYER.
2. ALTERNATE TOP STIRRUPS TO LAP BOTTOM STIRRUPS AT EACH END OF BEAM WHERE TWO TYPES OF TOP STIRRUPS ARE PROVIDED.
3. THE MINIMUM TOP LONGITUDIANL REINFORCING STEEL SHALL BE 4-NO. 5 BARS. SEE PROJECT PLANS FOR ADDITIONAL REQUIREMENTS.

NOTES: (CONTINUED)

4. FABRICATOR'S SHOP DRAWINGS SHALL SHOW COMPLETE DETAILS OF BEAM REINFORCING.
5. SEE SHEET 4 OF 4 FOR REINFORCEMENT DETAILS, BENDING DIAGRAMS. AND BEAM SECTION PROPERTIES.

STATE OF OHIO DEPARTMENT OF TRANSPORTATION

10-19-07
DATE

ADMINISTRATOR

REVISIONS
01-21-11
07-20-18

DESIGNED	CHECKED
MRG/SAM	WLF/SEM
DRAWN	REVIEWED
REF	LMW

OFFICE OF STRUCTURAL ENGINEERING

STANDARD BRIDGE DRAWING
PRESTRESSED CONCRETE BOX BEAM BRIDGE DETAILS

SCD NUMBER
PSBD-2-07

I:\br\bridstds\english\revisions\07-20-18\Final Drawings\PSBD-2-07\psbd207_07-20-18.dgn 6/18/2018 10:30:14 AM smeddles

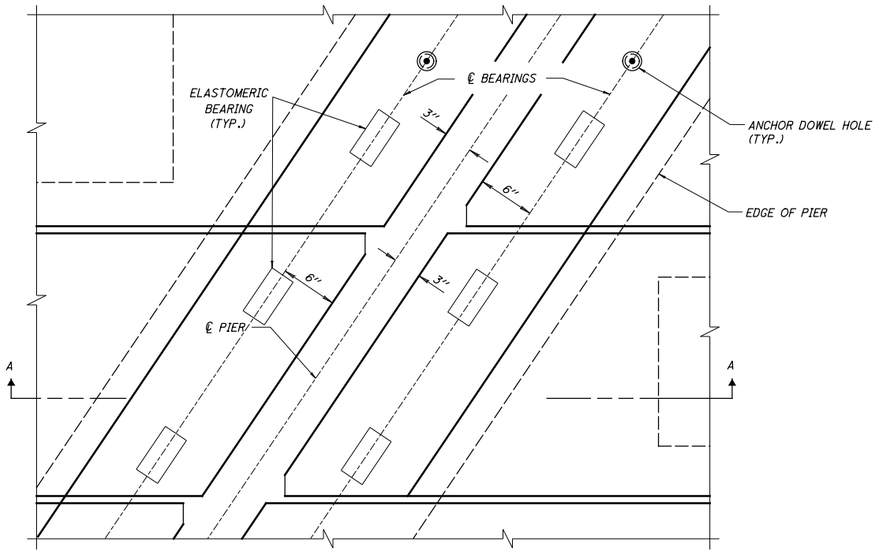

PARTIAL PLAN OF BEAM CONNECTION OVER PIER

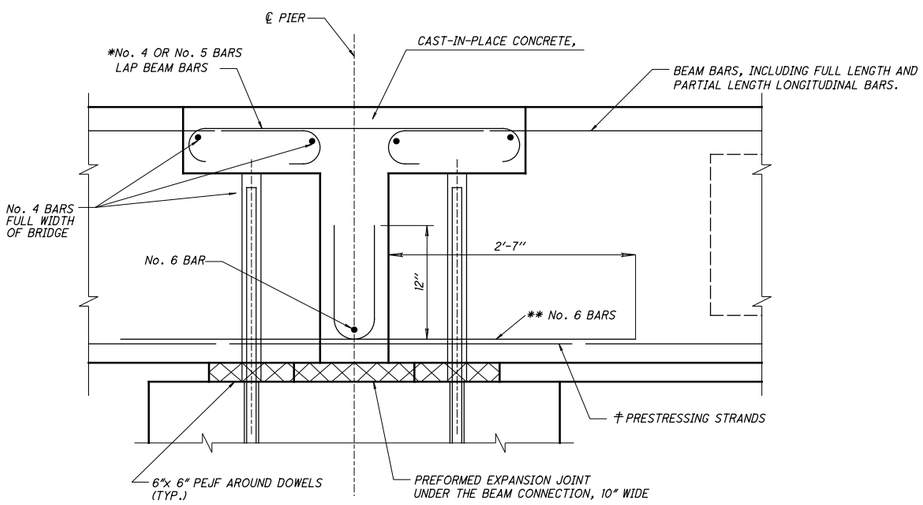

SECTION A-A

* LAP BARS SAME SIZE AND NUMBER AS BEAM BARS. HOOKS MAY BE ROTATED FROM THE VERTICAL POSITION TO PROVIDE THE REQUIRED CLEARANCE.

** PROVIDE 6 No. 6 BARS EACH BEAM END IN 48" WIDE BEAMS AND 4 No. 6 BARS EACH BEAM END IN 36" WIDE BEAMS. No. 6 BARS SHALL BE LOCATED ON TOP OF STIRRUPS AND SHALL BE UNIFORMLY SPACED ACROSS THE BEAM.

† AT THE FABRICATOR'S OPTION, STRANDS MAY BE EXTENDED AND BENT UP IN LIEU OF No. 6 BARS. 48" WIDE BEAMS WITH A TOTAL OF 12 OR MORE STRANDS SHALL HAVE A MINIMUM OF 6 STRANDS BENT UP. 48" WIDE BEAMS WITH LESS THAN 12 STRANDS TOTAL SHALL HAVE APPROXIMATELY ONE HALF OF THE TOTAL NUMBER OF STRANDS BENT UP. 36" WIDE BEAMS WITH A TOTAL OF 8 OR MORE STRANDS SHALL HAVE A MINIMUM OF 4 STRANDS BENT UP. 36" WIDE BEAMS WITH LESS THAN 8 STRANDS TOTAL SHALL HAVE APPROXIMATELY ONE HALF OF THE TOTAL NUMBER OF STRANDS BENT UP

NOTE: THE PRESTRESSING STRANDS WHICH ARE BENT UP SHALL BE STAGGERED IN ABUTTING BEAM ENDS TO AVOID INTERFERENCE.

BENT REINFORCING BARS							
MARK	TYPE	A	B	C	D	E	BENDING DIAGRAMS
A	1	32"	8"				
B	2	32"	13"	10½"	2"	7"	
C	2	32"	13"	4½"	2"	19"	
D	1	32"	13"				
E	2	32"	17"	4½"	2"	19"	
F	2	32"	17"	10½"	2"	7"	
G	1	32"	17"				
H	1	32"	23"				
I	1	32"	29"				
J	1	32"	38"				
K	1	44"	23"				
M	1	44"	8"				
N	1	44"	13"				
O	1	44"	17"				
P	2	44"	13"	13½"	2"	13"	
Q	2	44"	17"	13½"	2"	13"	
R	2	44"	17"	7½"	2"	25"	
S	1	44"	29"				
T	1	44"	38"				
V	2	44"	13"	7½"	2"	25"	
W	2	44"	12"	9½"	6½"	12"	
X	2	44"	17"	9½"	6½"	12"	
Y	2	44"	21"	9½"	6½"	12"	
WW	2	32"	12"	6½"	6½"	6"	
XX	2	32"	17"	6½"	6½"	6"	
YY	2	32"	21"	6½"	6½"	6"	

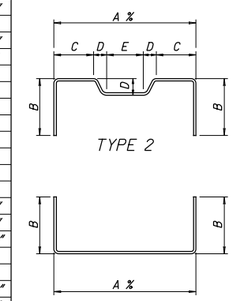

NOTE: ALL BARS ARE #4

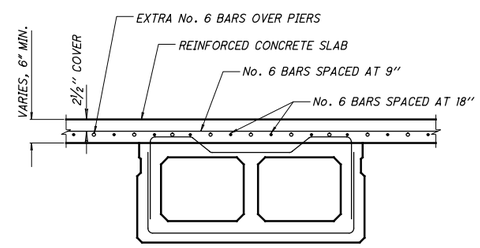

36" OR 48" WIDE COMPOSITE BEAM WITH SLAB

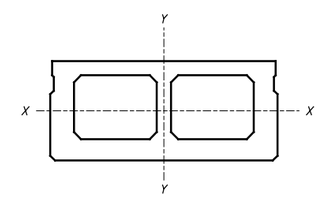

36" OR 48" WIDE COMPOSITE BEAM

48" WIDE BOX BEAM - SECTION PROPERTIES							
	D	12"	17"	21"	27"	33"	42"
BEAM ONLY	A_b	567.8	590.3	647.8	713.8	774.5	873.5
	I_b	6850	18819	33884	66222	111342	205459
	Y_b	5.97"	8.44"	10.42"	13.39"	16.33"	20.78"
	Z_t	1136	2198	3202	4866	6681	9684
	Z_b	1147	2230	3253	4945	6816	9886
COMPOSITE SECTION	I_c	18681	38620	62057	109704	173831	303315
	Y_b^c	8.32	11.40	13.69	17.13	20.51	25.49
	Z_t^c	5079	6898	8489	11119	13922	18367
	Z_b^c	2245	3387	4533	6403	8474	11901

36" WIDE BOX BEAMS - SECTION PROPERTIES							
	D	12"	17"	21"	27"	33"	42"
BEAM ONLY	A_b	423.8	458.3	515.8	581.8	642.5	741.5
	I_b	5122	14122	25622	50634	86049	161155
	Y_b	5.96"	8.42"	10.40"	13.37"	16.30"	20.75"
	Z_t	848	1646	2416	3714	5153	7582
	Z_b	859	1677	2464	3788	5279	7768
COMPOSITE SECTION	I_c	14003	29153	47126	83956	134078	236517
	Y_b^c	8.32	11.31	13.53	16.88	20.17	25.00
	Z_t^c	3809	5127	6308	8296	10448	13916
	Z_b^c	1682	2577	3483	4974	6649	9459

SECTION PROPERTIES FOR COMPOSITE SECTONS ARE COMPUTED WITH A SLAB THICKNESS OF 5". TOTAL THICKNESS OF SLAB IS 6" WHICH INCLUDES 1" MONOLITHIC WEARING SURFACE.

$$\frac{E_{slab}}{E_{beam}} = 0.90$$

DEFINITIONS:

D = TOTAL DEPTH OF THE NON-COMPOSITE BEAM (IN)

A_b = CROSS-SECTIONAL AREA OF THE NON-COMPOSITE BEAM (IN^2)

I_b = MOMENT OF INERTIA OF THE NON-COMPOSITE BEAM ABOUT THE X-X AXIS (IN^4)

Y_b = LOCATION OF THE NEUTRAL AXIS OF THE NON-COMPOSITE SECTION MEASURED FROM THE EXTREME BOTTOM FIBER (IN)

Z_t = SECTION MODULUS FOR THE EXTREME TOP FIBER OF THE NON-COMPOSITE BEAM (IN^3)

Z_b = SECTION MODULUS FOR THE EXTREME BOTTOM FIBER OF THE NON-COMPOSITE BEAM (IN^3)

I_c = MOMENT OF INERTIA OF THE COMPOSITE BEAM ABOUT THE X-X AXIS (IN^4)

Y_b^c = LOCATION OF NEUTRAL AXIS OF COMPOSITE SECTION MEASURED FROM THE EXTREME BOTTOM FIBER (IN)

Z_t^c = SECTION MODULUS FOR THE EXTREME TOP FIBER OF COMPOSITE SECTION (IN^3)

Z_b^c = SECTION MODULUS FOR THE EXTREME BOTTOM FIBER OF THE COMPOSITE SECTION (IN^3)

STATE OF OHIO DEPARTMENT OF TRANSPORTATION

10-19-07
DATE

ADMINISTRATOR

REVISIONS
01-21-11
07-20-18

DESIGNED	CHECKED
MRG/SAM	WLF/SEM
DRAWN	REVIEWED
REF	LMW

OFFICE OF STRUCTURAL ENGINEERING

STANDARD BRIDGE DRAWING
PRESTRESSED CONCRETE BOX BEAM BRIDGE DETAILS

SCD NUMBER
PSBD-2-07

I:\br\bridsts\english\revisions\07-20-18\Final Drawings\PSBD-2-07\psbd207_07-20-18.dgn 6/18/2018 10:30:38 AM smeddles

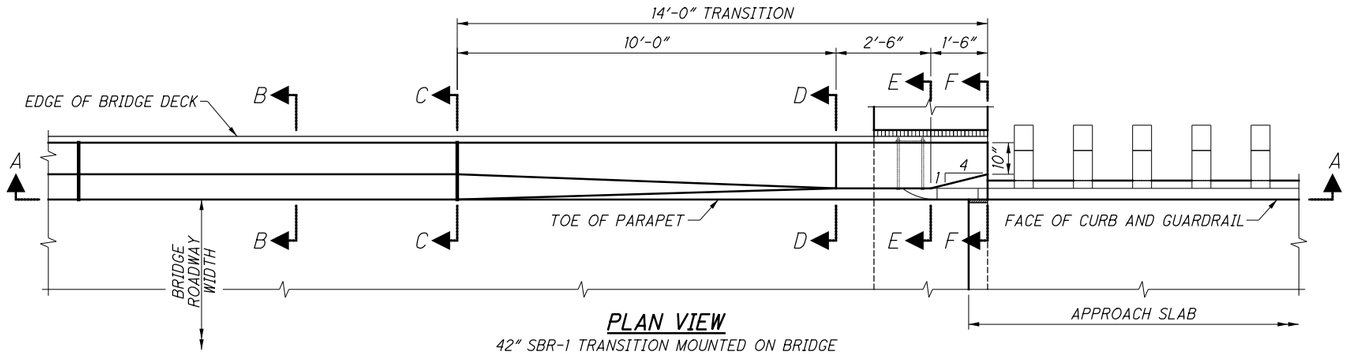

PLAN VIEW

42" SBR-1 TRANSITION MOUNTED ON BRIDGE
WITH SEMI-INTEGRAL ABUTMENT SHOWN
(INTEGRAL ABUTMENT AND CAPPED PILE ABUTMENT SIMILAR)

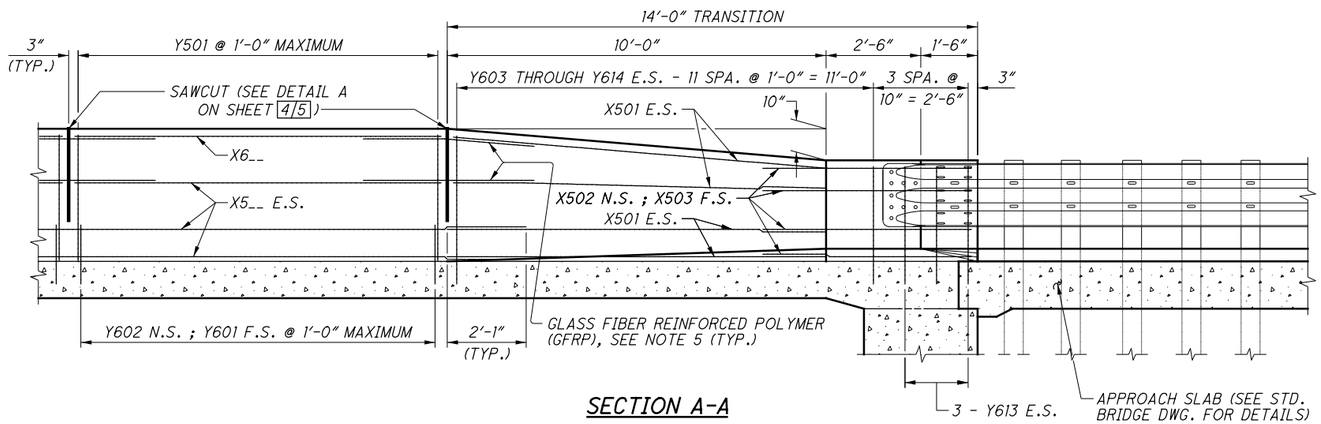

SECTION A-A

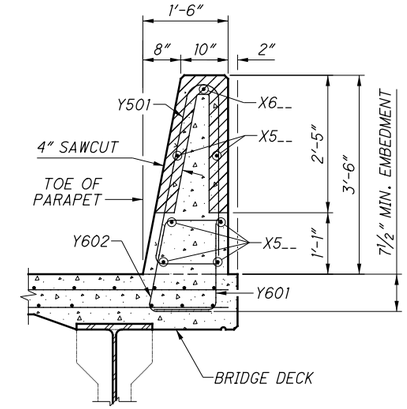

SECTION C-C

(GFRP NOT SHOWN)

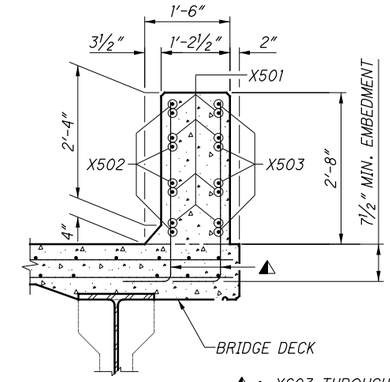

SECTION D-D

▲: Y603 THROUGH Y614

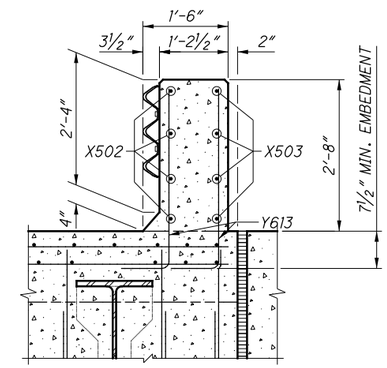

SECTION E-E

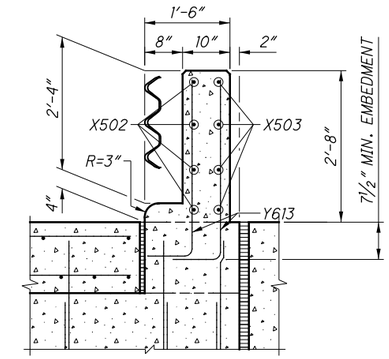

SECTION F-F

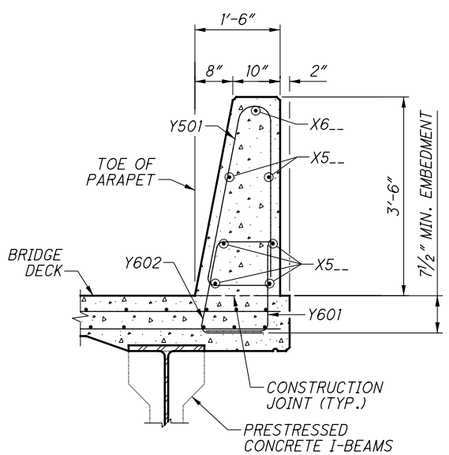

SECTION B-B

REINFORCED CONCRETE DECK
ON STEEL OR PRESTRESSED
CONCRETE I-BEAMS/GIRDERS

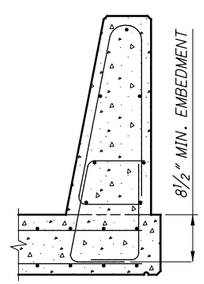

CONTINUOUS
OR
SINGLE SPAN
REINFORCED
CONCRETE
SLAB BRIDGE

REINFORCING STEEL FOR 42" SBR-1 TRANSITION MOUNTED ON BRIDGE OR APPROACH SLAB

MARK	LENGTH	TYPE
X501	10'-0"	STR
X502	5'-8"	BENT
X503	5'-8"	STR
X5__	⊕	STR
X6__ ✳	⊕	STR
Y501	7'-4"	BENT
Y601	A + 1'-9"	BENT
Y602	A + 2'-6"	BENT
Y603 THROUGH Y614	A + B + 10"	BENT

BENDING DIAGRAMS

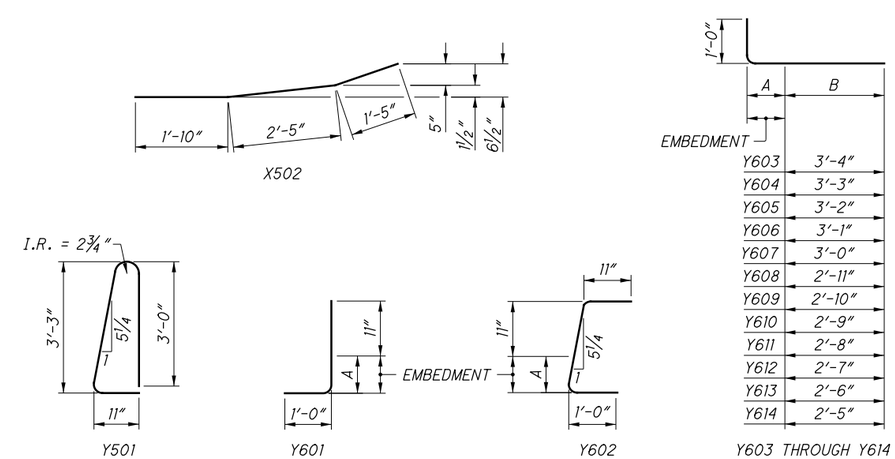

	A	B
Y603	3'-4"	
Y604	3'-3"	
Y605	3'-2"	
Y606	3'-1"	
Y607	3'-0"	
Y608	2'-11"	
Y609	2'-10"	
Y610	2'-9"	
Y611	2'-8"	
Y612	2'-7"	
Y613	2'-6"	
Y614	2'-5"	

Y603 THROUGH Y614

⊕ SEE PROJECT PLANS.
✳ FIELD BEND BARS WHERE NECESSARY.

NOTES:

1. FOR ALL SINGLE SLOPE CONCRETE BRIDGE RAILINGS INCLUDING THE 14'-0" TRANSITIONS, PROJECT PLANS SHALL INCLUDE PLAN VIEW, ELEVATION VIEW, SECTIONS, REINFORCING MARKS, REINFORCING BENDING DIAGRAMS, AND REINFORCING WEIGHTS.
2. SEE APPROPRIATE STANDARD BRIDGE DRAWING FOR ABUTMENT DETAILS.
3. FOR BRIDGE TERMINAL ASSEMBLY, SEE STD. CONSTR. DWGS. MGS-3.1 AND MGS-3.2.
4. FOR SAWCUT PERIMETER LENGTH, SEE DETAIL A ON SHEET 4/5.
5. FOR DEFLECTION JOINT DETAILS AND ADDITIONAL NOTES, SEE SHEET 5/5.

LEGEND:

E.S. = EACH SIDE
F.S. = FAR SIDE
N.S. = NEAR SIDE

DESIGN AGENCY
OFFICE OF STRUCTURAL ENGINEERING

STATE OF OHIO DEPARTMENT OF TRANSPORTATION
07-19-13
DATE
ADMINISTRATOR

REVISIONS
01-17-2014
07-20-2018

SBR-1-13

STANDARD BRIDGE DRAWING
SINGLE SLOPE CONCRETE BRIDGE RAILING

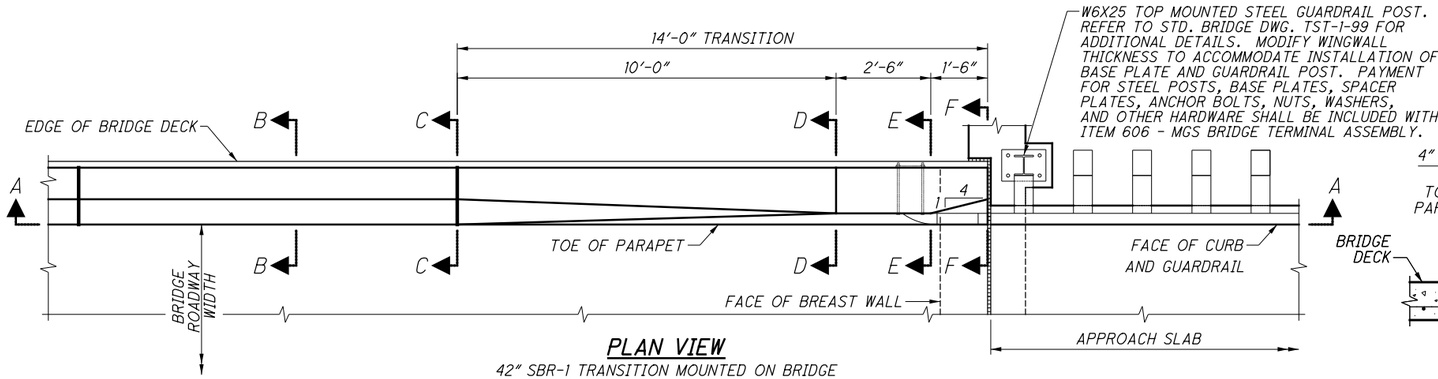

PLAN VIEW

42" SBR-1 TRANSITION MOUNTED ON BRIDGE WITH CAPPED PILE ABUTMENT SHOWN

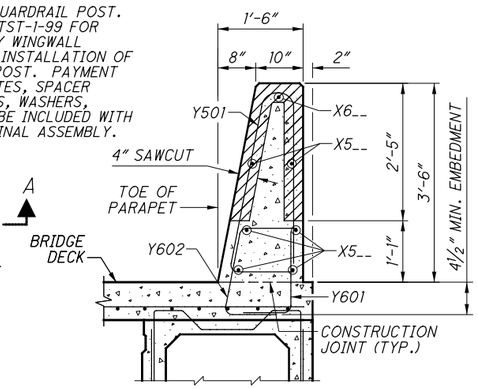

SECTION C-C

(GFRP NOT SHOWN)

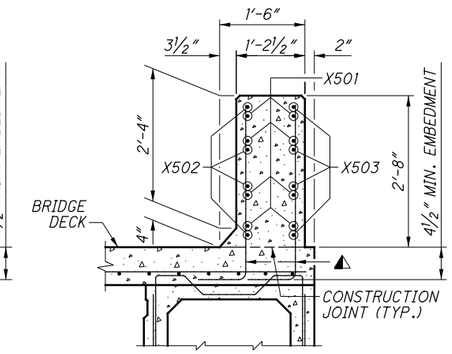

SECTION D-D

▲: Y603 THROUGH Y616

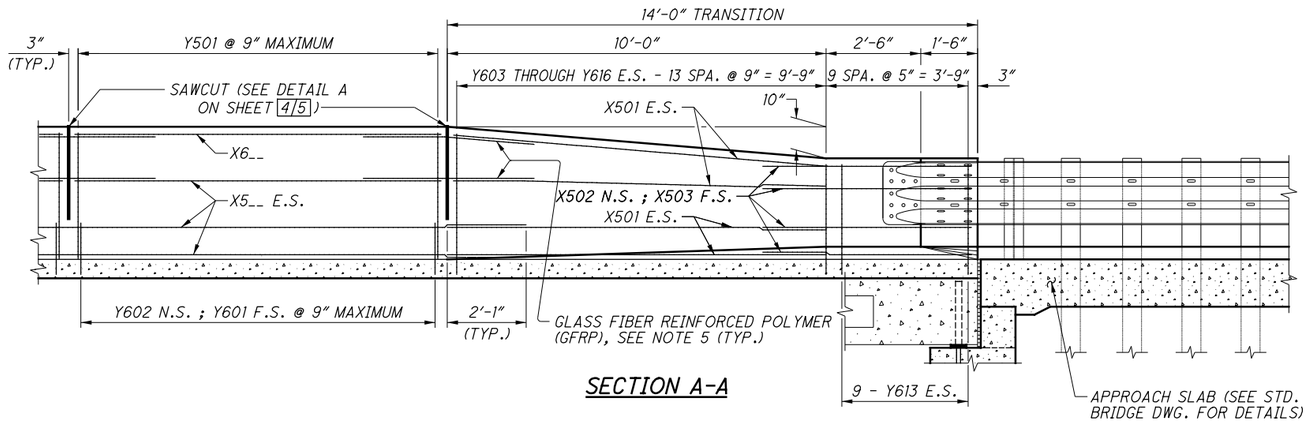

SECTION A-A

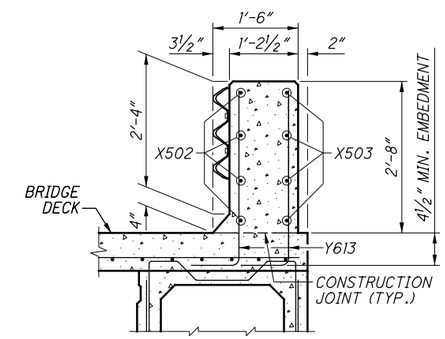

SECTION E-E

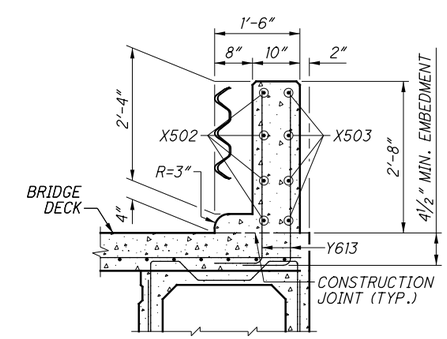

SECTION F-F

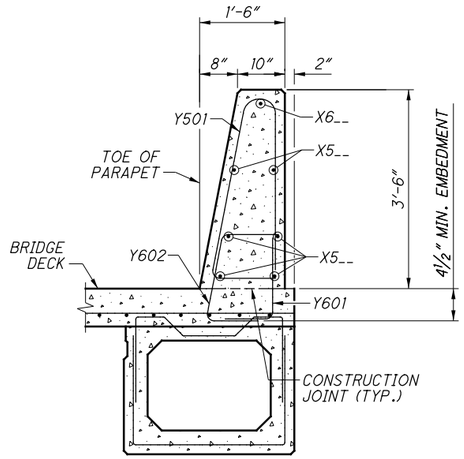

SECTION B-B

COMPOSITE PRESTRESSED CONCRETE BOX BEAMS

NOTES:

1. FOR ALL SINGLE SLOPE CONCRETE BRIDGE RAILINGS INCLUDING THE 14'-0" TRANSITIONS, PROJECT PLANS SHALL INCLUDE PLAN VIEW, ELEVATION VIEW, SECTIONS, REINFORCING MARKS, REINFORCING BENDING DIAGRAMS, AND REINFORCING WEIGHTS.
2. SEE APPROPRIATE STANDARD BRIDGE DRAWING FOR ABUTMENT DETAILS.
3. FOR BRIDGE TERMINAL ASSEMBLY, SEE STD. CONSTR. DWGS. MGS-3.1 AND MGS-3.2.
4. FOR SAWCUT PERIMETER LENGTH, SEE DETAIL A ON SHEET 4/5.
5. FOR DEFLECTION JOINT DETAILS AND ADDITIONAL NOTES, SEE SHEET 5/5.

LEGEND:

E.S. = EACH SIDE
F.S. = FAR SIDE
N.S. = NEAR SIDE

REINFORCING STEEL FOR 42" SBR-1 TRANSITION MOUNTED ON BRIDGE

MARK	LENGTH	TYPE
X501	10'-0"	STR
X502	5'-8"	BENT
X503	5'-8"	STR
X5__	⊕	STR
X6__ ✳	⊕	STR
Y501	7'-4"	BENT
Y601	A + 1'-9"	BENT
Y602	A + 2'-6"	BENT
Y603 THROUGH Y614	A + B + 10"	BENT

BENDING DIAGRAMS

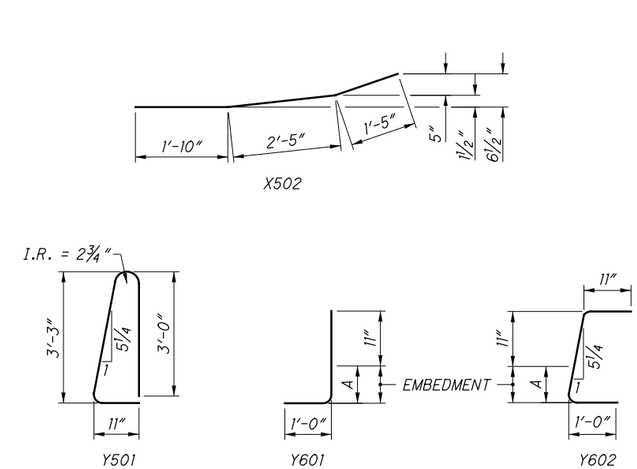

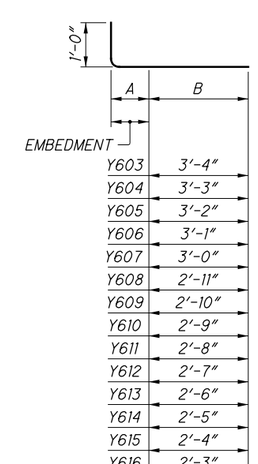

	A	B
Y603	3'-4"	
Y604	3'-3"	
Y605	3'-2"	
Y606	3'-1"	
Y607	3'-0"	
Y608	2'-11"	
Y609	2'-10"	
Y610	2'-9"	
Y611	2'-8"	
Y612	2'-7"	
Y613	2'-6"	
Y614	2'-5"	
Y615	2'-4"	
Y616	2'-3"	

⊕ SEE PROJECT PLANS.
✳ FIELD BEND BARS WHERE NECESSARY.

DESIGN AGENCY
OFFICE OF STRUCTURAL ENGINEERING

STATE OF OHIO DEPARTMENT OF TRANSPORTATION
07-19-13
DATE
ADMINISTRATOR

REVISIONS
01-17-2014
07-20-2018

SBR-1-13

STANDARD BRIDGE DRAWING
SINGLE SLOPE CONCRETE BRIDGE RAILING

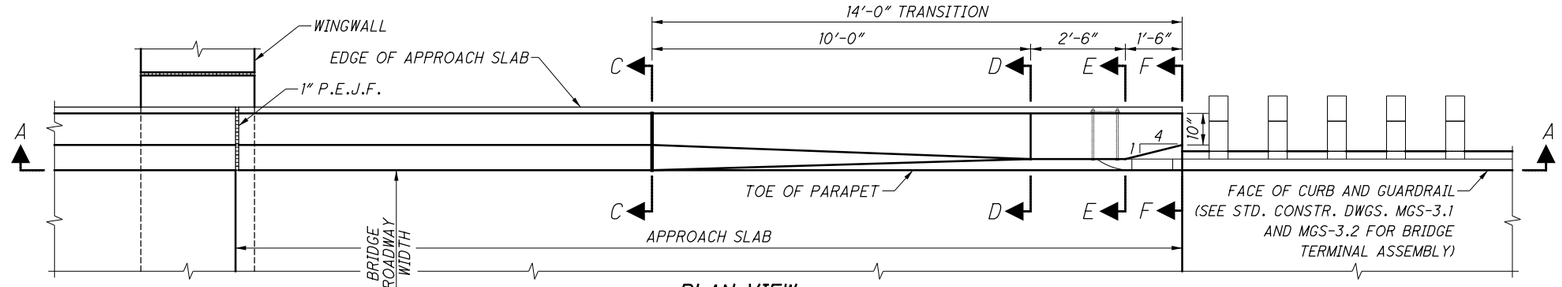

PLAN VIEW

42" SBR-1 TRANSITION MOUNTED ON APPROACH SLAB
WITH SEMI-INTEGRAL ABUTMENT SHOWN
(INTEGRAL ABUTMENT AND CAPPED PILE ABUTMENT SIMILAR)

LEGEND:

E.S.	=	EACH SIDE
F.S.	=	FAR SIDE
N.S.	=	NEAR SIDE
P.E.J.F.	=	PREFORMED EXPANSION JOINT FILLER

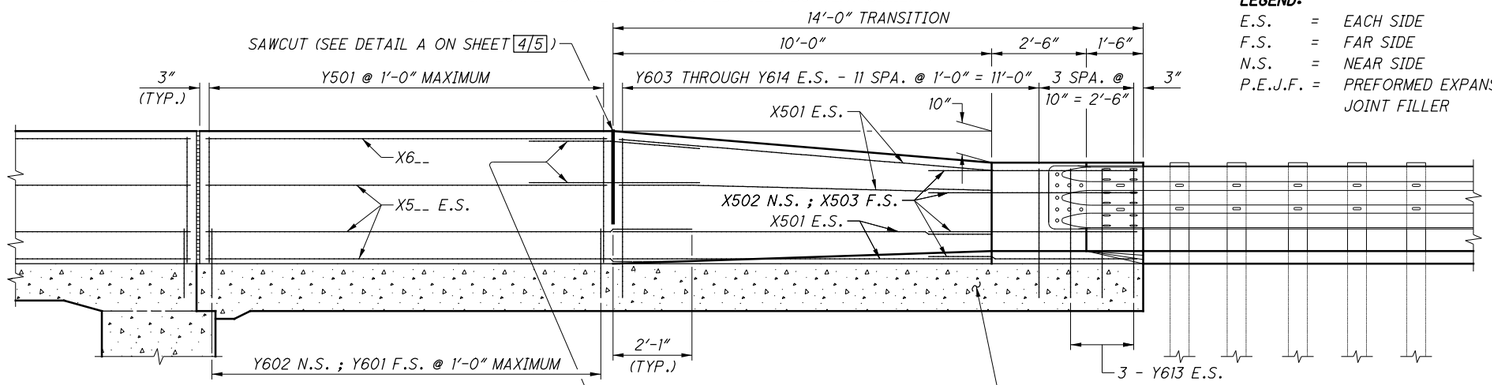

SECTION A-A

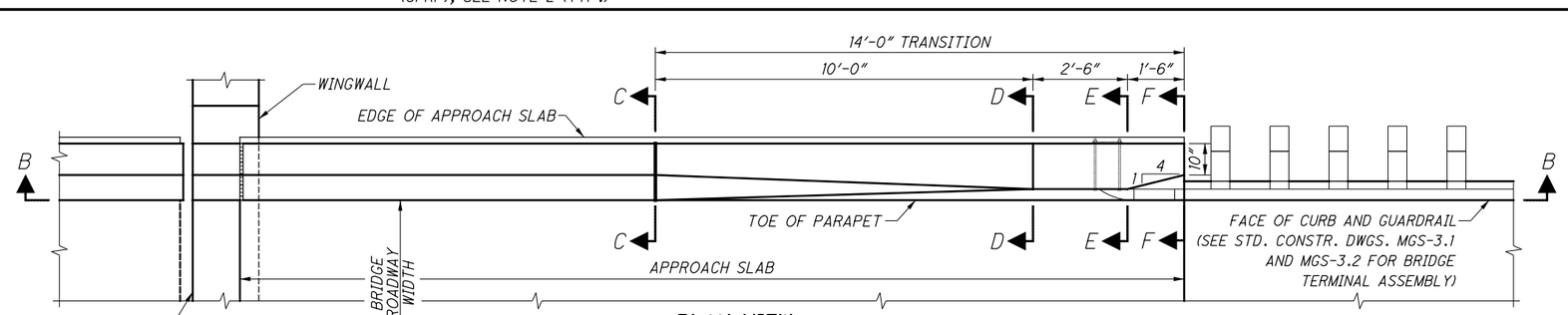

PLAN VIEW

42" SBR-1 TRANSITION MOUNTED ON APPROACH SLAB
WITH TYPICAL ABUTMENT SHOWN

LEGEND:

E.S.	=	EACH SIDE
F.S.	=	FAR SIDE
N.S.	=	NEAR SIDE
P.E.J.F.	=	PREFORMED EXPANSION JOINT FILLER

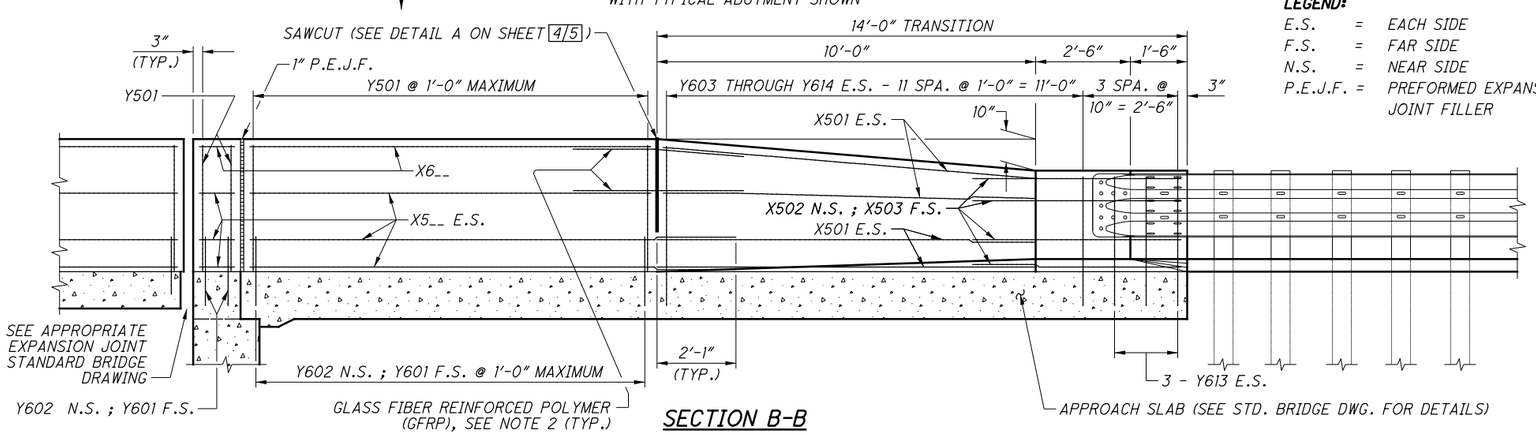

SECTION B-B

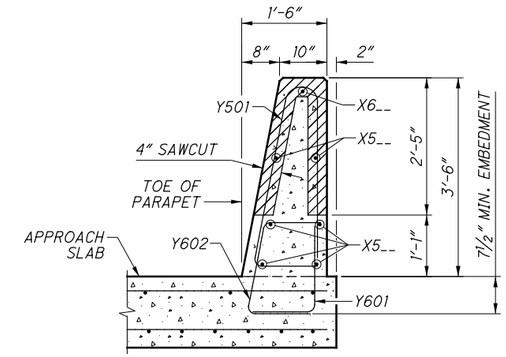

SECTION C-C

(GFRP NOT SHOWN)

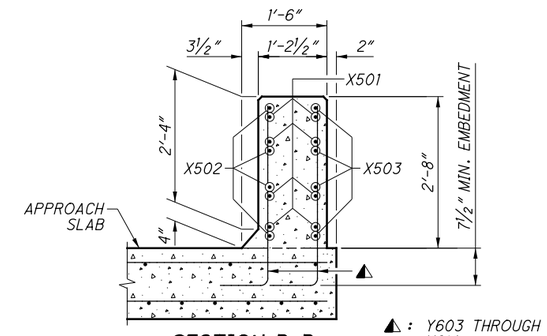

SECTION D-D

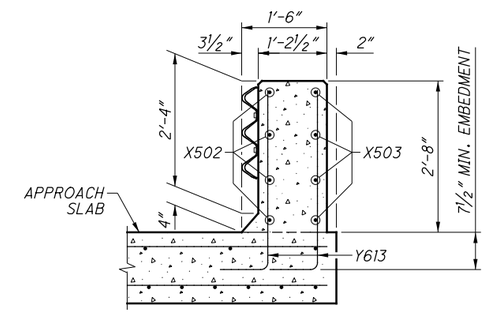

SECTION E-E

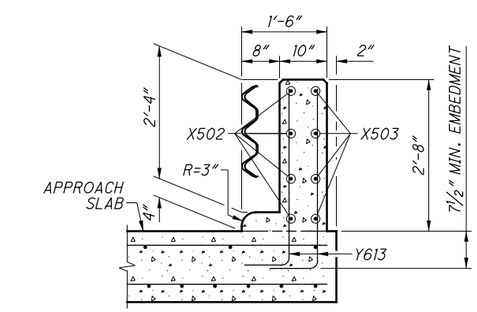

SECTION F-F

NOTES:

1. FOR REINFORCING STEEL LIST, SEE SHEET 1/5.
2. FOR ADDITIONAL DETAILS AND NOTES, SEE SHEETS 1/5 AND 5/5.

DESIGN AGENCY
OFFICE OF STRUCTURAL ENGINEERING

STATE OF OHIO DEPARTMENT OF TRANSPORTATION
07-19-13
DATE
ADMINISTRATOR

REVISIONS
01-17-2014
07-20-2018

SBR-1-13

STANDARD BRIDGE DRAWING
SINGLE SLOPE CONCRETE BRIDGE RAILING

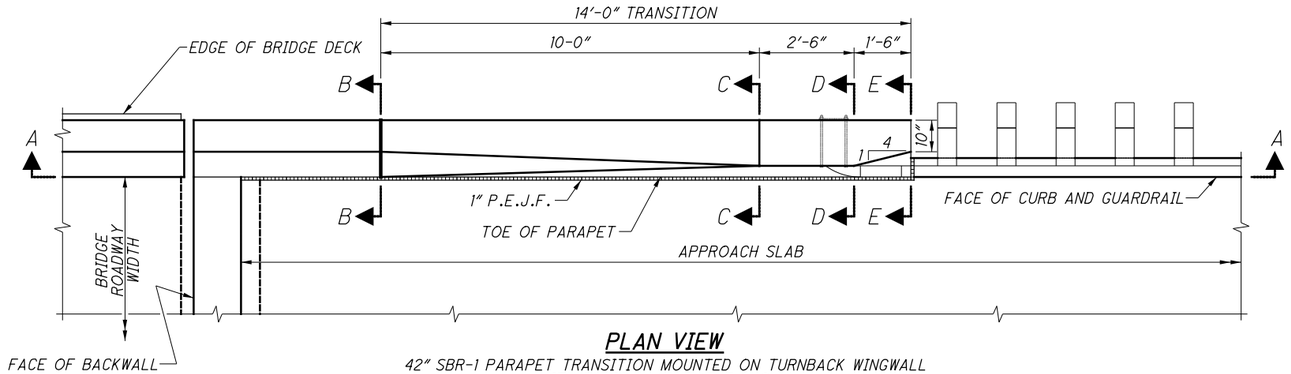

PLAN VIEW

42" SBR-1 PARAPET TRANSITION MOUNTED ON TURNBACK WINGWALL WITH TYPICAL ABUTMENT SHOWN

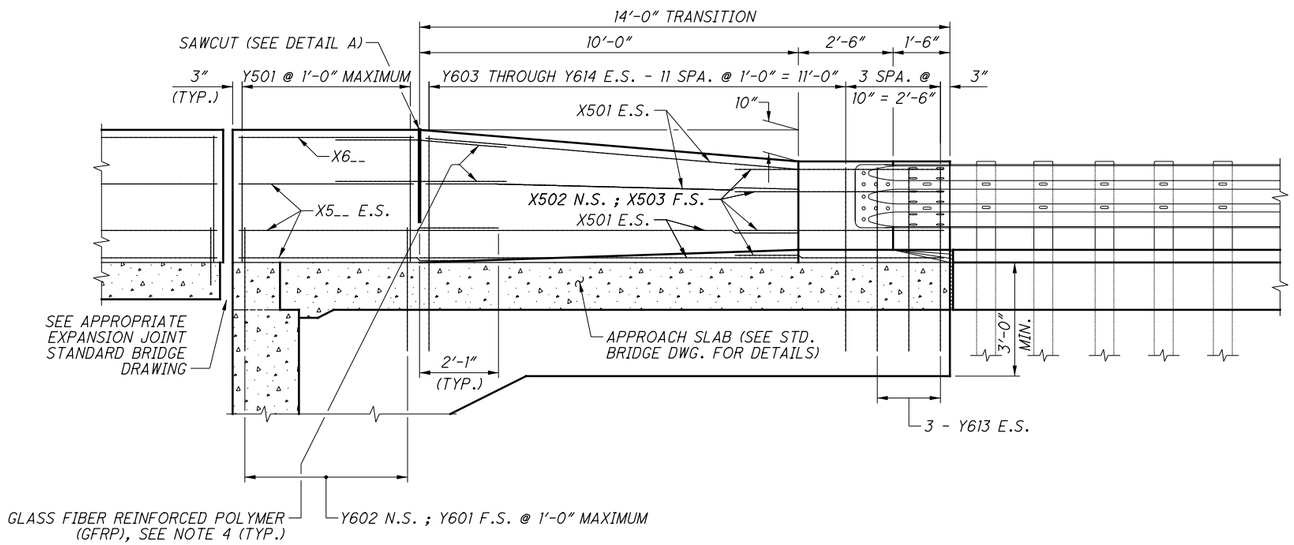

SECTION A-A

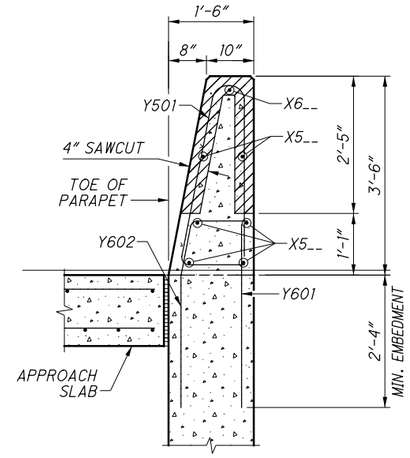

SECTION B-B

(GFRP NOT SHOWN)

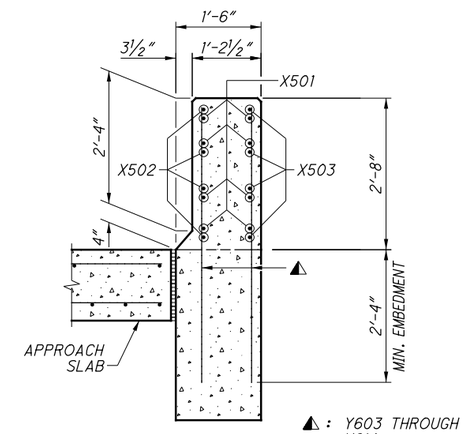

SECTION C-C

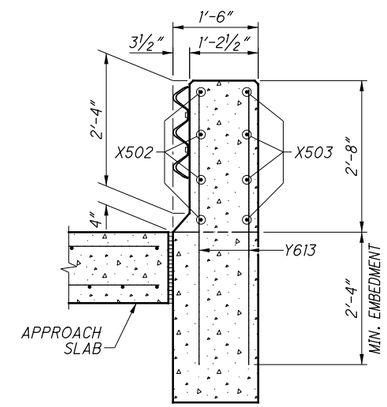

SECTION D-D

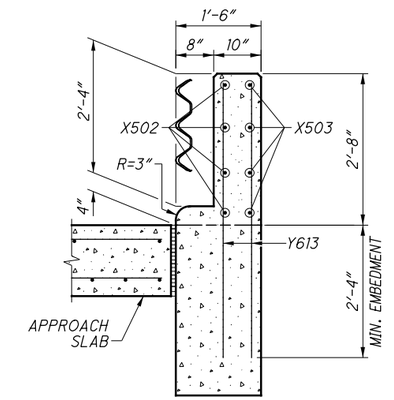

SECTION E-E

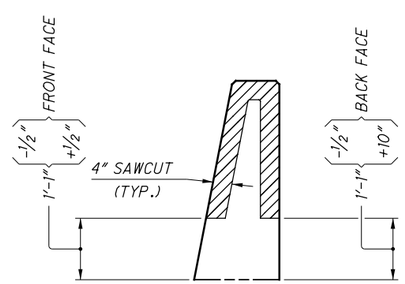

DETAIL A

SECTION THROUGH SAWCUT
SAWCUT PERIMETER = 5'-9"

LEGEND:

E.S. = EACH SIDE
F.S. = FAR SIDE
N.S. = NEAR SIDE
P.E.J.F. = PREFORMED EXPANSION JOINT FILLER

NOTES:

1. FOR ALL SINGLE SLOPE CONCRETE BRIDGE RAILINGS INCLUDING THE 14'-0" TRANSITIONS, PROJECT PLANS SHALL INCLUDE PLAN VIEW, ELEVATION VIEW, SECTIONS, REINFORCING MARKS, REINFORCING BENDING DIAGRAMS, AND REINFORCING WEIGHTS.
2. SEE APPROPRIATE STANDARD BRIDGE DRAWING FOR ABUTMENT DETAILS.
3. FOR BRIDGE TERMINAL ASSEMBLY, SEE STD. CONSTR. DWGS. MGS-3.1 AND MGS-3.2.
4. FOR DEFLECTION JOINT DETAILS AND ADDITIONAL NOTES, SEE SHEET 5/5.

REINFORCING STEEL FOR 42" SBR-1 TRANSITION MOUNTED ON WINGWALL

MARK	LENGTH	TYPE
X501	10'-0"	STR
X502	5'-8"	BENT
X503	5'-8"	STR
X5__	⊕	STR
X6__ ✳	⊕	STR
Y501	7'-4"	BENT
Y601	A + 11"	STR
Y602	A + 1'-8"	BENT
Y603 THROUGH Y614	A + B	STR

BENDING DIAGRAMS

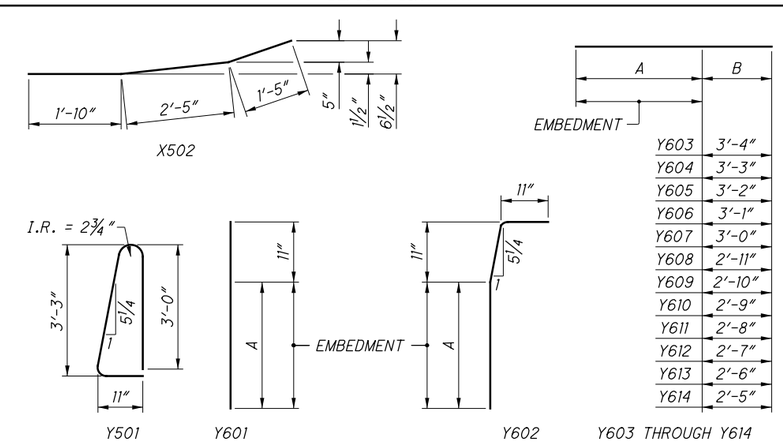

⊕ SEE PROJECT PLANS.
✳ FIELD BEND BARS WHERE NECESSARY.

DESIGN AGENCY
OFFICE OF STRUCTURAL ENGINEERING

STATE OF OHIO DEPARTMENT OF TRANSPORTATION
07-19-13
DATE
ADMINISTRATOR

REVISIONS
01-17-2014
07-20-2018

SBR-1-13

STANDARD BRIDGE DRAWING
SINGLE SLOPE CONCRETE BRIDGE RAILING

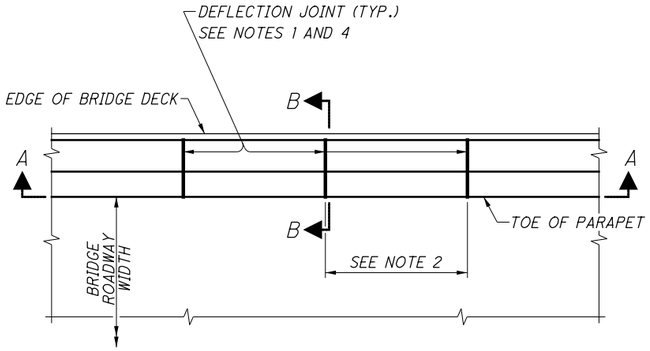

PLAN VIEW

DEFLECTION JOINT DETAIL

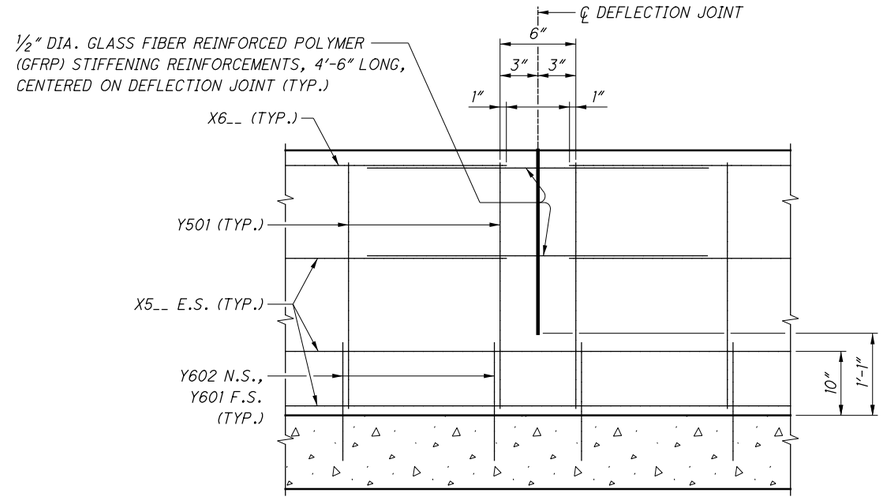

SECTION A-A

GFRP REBAR STIFFENING DETAIL AT DEFLECTION JOINTS FOR SINGLE SLOPE CONCRETE BRIDGE RAILING

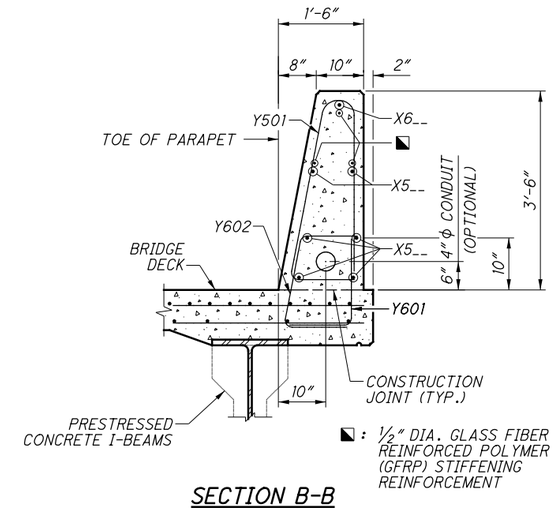

SECTION B-B

REINFORCED CONCRETE DECK ON STEEL OR PRESTRESSED CONCRETE I-BEAMS/GIRDERS SHOWN

NOTES:

1. FOR THE ENTIRE LENGTH OF SINGLE SLOPE CONCRETE BRIDGE RAILINGS, PROJECT PLANS SHALL SHOW THE LOCATIONS OF DEFLECTION JOINTS.
2. DEFLECTION JOINT SPACING SHALL NOT EXCEED 15′-0″ ON CENTERS. FOR CONTINUOUS STRUCTURES, THE DEFLECTION JOINTS WITHIN THE DEAD LOAD CONTRAFLEXURE (NEGATIVE MOMENT REGIONS OVER PIER LOCATIONS) SHALL BE SPACED NOT LESS THAN 5′-0″ NOR MORE THAN 7′-6″ ON CENTERS.
3. PAYMENT FOR ½″ DIA. GLASS FIBER REINFORCED POLYMER (GFRP) STIFFENING REINFORCEMENT SHALL BE INCLUDED WITH CONTRACT PRICE FOR ITEM 509 - EPOXY COATED REINFORCING STEEL.
4. LIMITS OF SAWCUT IS SHOWN IN DETAIL A, SHEET 4/5 . THE 4″ SAWCUT DEPTH SHOWN IN DETAIL A IS THE MINIMUM REQUIRED. HOWEVER, THE CONTRACTOR HAS AN OPTION TO PERFORM FULL DEPTH SAWCUT.

DESIGN CRITERIA:
42″ SINGLE SLOPE CONCRETE BRIDGE RAILINGS MEET THE REQUIREMENTS OF NCHRP 350 TEST LEVEL 5 AND "AASHTO LRFD BRIDGE DESIGN SPECIFICATIONS", 2012.

DESIGN DATA:
CONCRETE - COMPRESSIVE STRENGTH = 4.5 KSI
REINFORCING STEEL - MINIMUM YIELD STRENGTH = 60 KSI

AREA OF STANDARD 42″ SBR-1 CROSS SECTION = 588.0 SQ. IN.
VOLUME OF 42″ SBR-1 14′-0″ TRANSITION SECTION = 1.82 CU. YD.

DEFLECTION JOINTS FOR CONCRETE PARAPETS:
FOR SLIPFORMED CONSTRUCTION:

AS SOON AS CUTTING OPERATIONS CAN BEGIN WITHOUT DAMAGING THE CONCRETE, SAWCUT 1 ¼ INCH DEEP DEFLECTION CONTROL JOINTS ALONG THE PERIMETER OF THE PARAPET.

AFTER THE CURING PERIOD AND BEFORE APPLYING LOAD TO THE PARAPET, PERFORM 4 INCH SAWCUT AS SHOWN IN DETAIL A, SHEET 4/5 . APPLIED PARAPET LOAD INCLUDES: CONSTRUCTION LOADS ON THE DECK (EXCLUDING PERSONNEL; HAND OPERATED EQUIPMENT AND MANUALLY POWERED VEHICLES); AND VEHICLE TRAFFIC IN THE LANE IMMEDIATELY ADJACENT TO THE PARAPET AFTER REMOVAL OF TRAFFIC CONTROL DEVICES.

FOR CONVENTIONALLY FORMED CONSTRUCTION:

REMOVE THE FORMS BEFORE APPLYING LOAD TO THE PARAPET. AS SOON AS THE FORMS ARE REMOVED, PERFORM 4-INCH SAWCUT AS SHOWN IN DETAIL A, SHEET 4/5 . THE 1 ¼ INCH SAWCUTS ARE NOT REQUIRED.

THE CONTRACTOR HAS AN OPTION TO PERFORM FULL DEPTH SAWCUT. HOWEVER, THE SAWCUT SHALL NOT BE LESS THAN 1′-0½″ FROM THE TOP OF THE CONCRETE DECK SLAB.

USE AN EDGE GUIDE, FENCE, OR JIG TO ENSURE THAT THE CUT JOINT IS STRAIGHT, TRUE, AND ALIGNED ON ALL FACES OF THE PARAPET. THE JOINT WIDTH SHALL BE THE WIDTH OF THE SAW BLADE, A NOMINAL WIDTH OF ¼ INCH.

SEAL THE PERIMETER OF THE DEFLECTION JOINTS TO A MINIMUM DEPTH OF ONE INCH WITH A POLYURETHANE OR POLYMERIC MATERIAL CONFORMING TO ASTM C920, TYPE S. LEAVE THE BOTTOM ½ INCH OF BOTH THE INSIDE AND OUTSIDE FACES OF THE PARAPET UNSEALED TO ALLOW ANY WATER WHICH MAY ENTER THE JOINT TO ESCAPE.

AT EACH DEFLECTION JOINT LOCATION, USE GLASS FIBER REINFORCED POLYMER (GFRP) REINFORCEMENT TO MAINTAIN THE RIGIDITY OF THE CAGE ACROSS THE PROPOSED JOINTS AT THOSE LONGITUDINAL BARS AS SHOWN IN SECTIONS A-A & B-B ABOVE. OTHER NON-FERROUS REINFORCEMENT MAY BE PROPOSED FOR USE, SUBJECT TO APPROVAL BY THE ENGINEER.

FOR TRANSITION SECTION, PLACE A DEFLECTION JOINT AT THE BEGINNING OF THE 14′-0″ TRANSITION. DEFLECTION JOINTS ARE NOT REQUIRED WITHIN THE 14′-0″ TRANSITION SECTION.

MAXIMUM SPACING OF VERTICAL REINFORCING BARS FOR STANDARD 42″ SBR-1 CONCRETE PARAPETS:
THE MAXIMUM SPACING OF VERTICAL REINFORCING BARS FOR THE STANDARD 42″ SBR-1 CONCRETE PARAPET SHALL BE 1′-0″, UNLESS NOTED OTHERWISE.

MAXIMUM SPACING OF VERTICAL REINFORCING BARS FOR 42″ SBR-1 TRANSITIONS:
THE MAXIMUM SPACING OF VERTICAL REINFORCING BARS FOR THE 42″ SBR-1 TRANSITION SECTION SHALL BE AS SHOWN ON SHEETS 1/5, 2/5, 3/5, OR 4/5.

MINIMUM EMBEDMENT OF VERTICAL REINFORCING BARS:
IF THE MINIMUM EMBEDMENT SHOWN FOR THE VERTICAL REINFORCING BARS INTO THE BRIDGE DECK, APPROACH SLAB, OR WINGWALL IS NOT MET, THEN THE DESIGNER SHALL CALCULATE THE REQUIRED REINFORCEMENT ACCORDING TO SECTION 13 OF THE "AASHTO LRFD BRIDGE DESIGN SPECIFICATIONS" ADOPTED BY THE AMERICAN ASSOCIATION OF STATE HIGHWAY AND TRANSPORTATION OFFICIALS.

DESIGN AGENCY
OFFICE OF STRUCTURAL ENGINEERING

STATE OF OHIO DEPARTMENT OF TRANSPORTATION
07-19-13
DATE
ADMINISTRATOR

REVISIONS
01-17-2014
07-20-2018

SBR-1-13

STANDARD BRIDGE DRAWING
SINGLE SLOPE CONCRETE BRIDGE RAILING

Appendix D:
Existing Structure Plans

LUCAS COUNTY
SILICA DRIVE over TEN MILE CREEK
BRIDGE NO. 106
SYLVANIA TOWNSHIP
CITY OF SYLVANIA

GENERAL NOTES

Note #1. All work on this project shall conform in all respects to the requirements of "State of Ohio, Department of Highways, Construction and Material Specifications, January 1, 1967" wherever applicable.

Structural Concrete - Type C 1000 psi
Reinforcing Steel - Sizes #4 and over = A432, f_y = 60,000 psi
Sizes #3 = A15 - Intermediate Grade

Note #2. Contract shall be awarded on a Lump Sum Contract basis with provision for adjustments at unit prices, debit or credit, as requested in Note #4.

Note #3. Plans of original bridge are on file at the Lucas County Engineer's office where they may be referred to by individual bidders.

Note #4. Bids shall quote unit prices, debit or credit, for the following items of work whose exact quantity can not be foreseen:-

A. The removing, cleaning, bonding, and replacement of structural concrete deck slab per square foot of area of deck floor per one inch of thickness.
B. The furnishing and installing of A432 grade deformed reinforcing bars not called for in these contract documents in place complete per pound.
C. The repair of exposed vertical surfaces of the bridge for any area in excess of the estimated quantity per square foot of surface area installed in place and finished complete. (Item R8 on Sheet 4).
D. The repair of exposed soffit of the bridge for any area in excess of the estimated quantity per square foot of surface area installed in place and finished complete. (Item R9, Sh4)
E. Drilling and grouting of Groutite Bolts per each hole including grout.

Note #5. The contractor shall provide a field office per requirements of the specifications and have a telephone installed and maintained in this field office during the construction of the project. The contractor shall also provide and maintain sanitary provisions per the specifications, all of the above to be included in the lump sum bid of the project.

Note #6. During the construction of the project, the bridge will be closed to thru traffic but Silica Drive shall be open for the ingress and egress of local traffic. The adjoining pedestrian bridge and approach sidewalks shall be kept open for pedestrian traffic.

Note #7. Provide, erect and maintain 48" x 30" size "Road Closed" signs and barricades at each end of the bridge and at the following locations:
1. Silica Drive and Monroe Street
2. Silica Drive and Convent Boulevard
3. Silica Drive and Eubank

CONSTRUCTION SCHEDULE

A. Installation of the two temporary support bents (See Item #1, Sheet 2) shall be undertaken immediately after award of contract.
B. Remaining repair work and closing of bridge to traffic shall be delayed until after the closing of the Sylvania Public Schools in June, 1968.
C. Completion of work and reopening of bridge to traffic shall be no later than the opening of the Sylvania Public Schools in September, 1968.

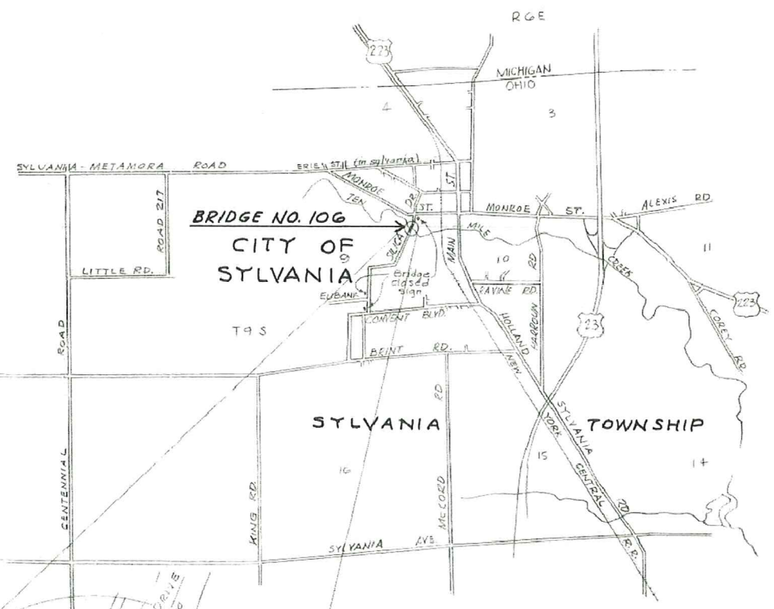

LOCATION PLAN

0 1/4 1/2 3/4 1
SCALE IN MILES

I HEREBY APPROVE THESE PLANS AND DECLARE THAT THE MAKING OF THIS IMPROVEMENT WILL REQUIRE THE CLOSING OF THE HIGHWAY TO THRU TRAFFIC, AND THAT DETOURS WILL BE PROVIDED AS REQUIRED.

APPROVED 12-19-67 B. K. Kisting
LUCAS COUNTY ENGINEER

DATE _____

APPROVED Hugh C. Vergen, Ed J. Wittenberg
LUCAS COUNTY COMMISSIONERS

DATE _____

APPROVED Donald O. Burnard
MAYOR CITY OF SYLVANIA

DATE 12-1-67

APPROVED Clayton F. Fischer
CLERK-AUDITOR CITY OF SYLVANIA

DATE 12-1-67

APPROVED John P. Arnot
SERVICE DIRECTOR CITY OF SYLVANIA

DATE 12-1-67

MATERIAL KEY

- NEW Conc. To be cast
- Bituminous Conc.
- Concrete Overlay
- Disintegrated Conc.
- Good Concrete
- Material Not given in report

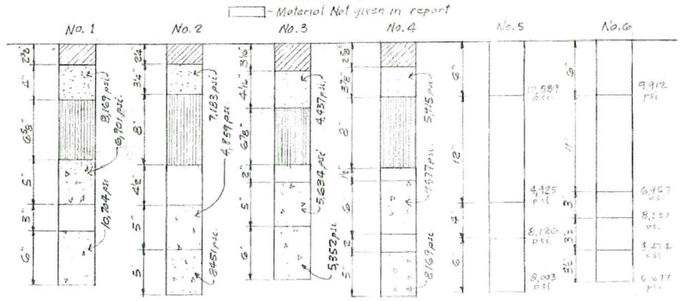

Logs for No.1, No.2, No.3 & No.4 taken from "TOLEDO TESTING LAB." report No. 354072 (6/5/67)
Logs for No.5 & No.6 taken from "TOLEDO TESTING LAB." report No. 354072 (1/20/67)

LOG OF CONCRETE CORES

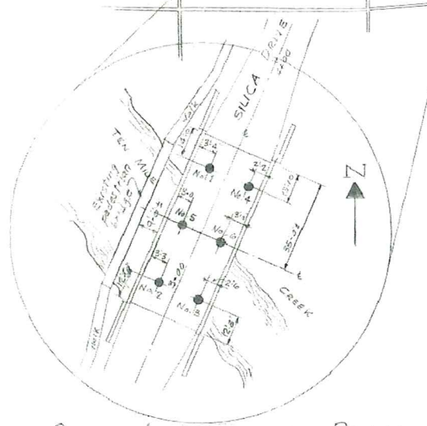

CORE LOCATION PLAN

PLANS BY
RAYMOND C. REESE ASSOCIATES
TOLEDO, OHIO

BRIDGE #106
SFN-4862473

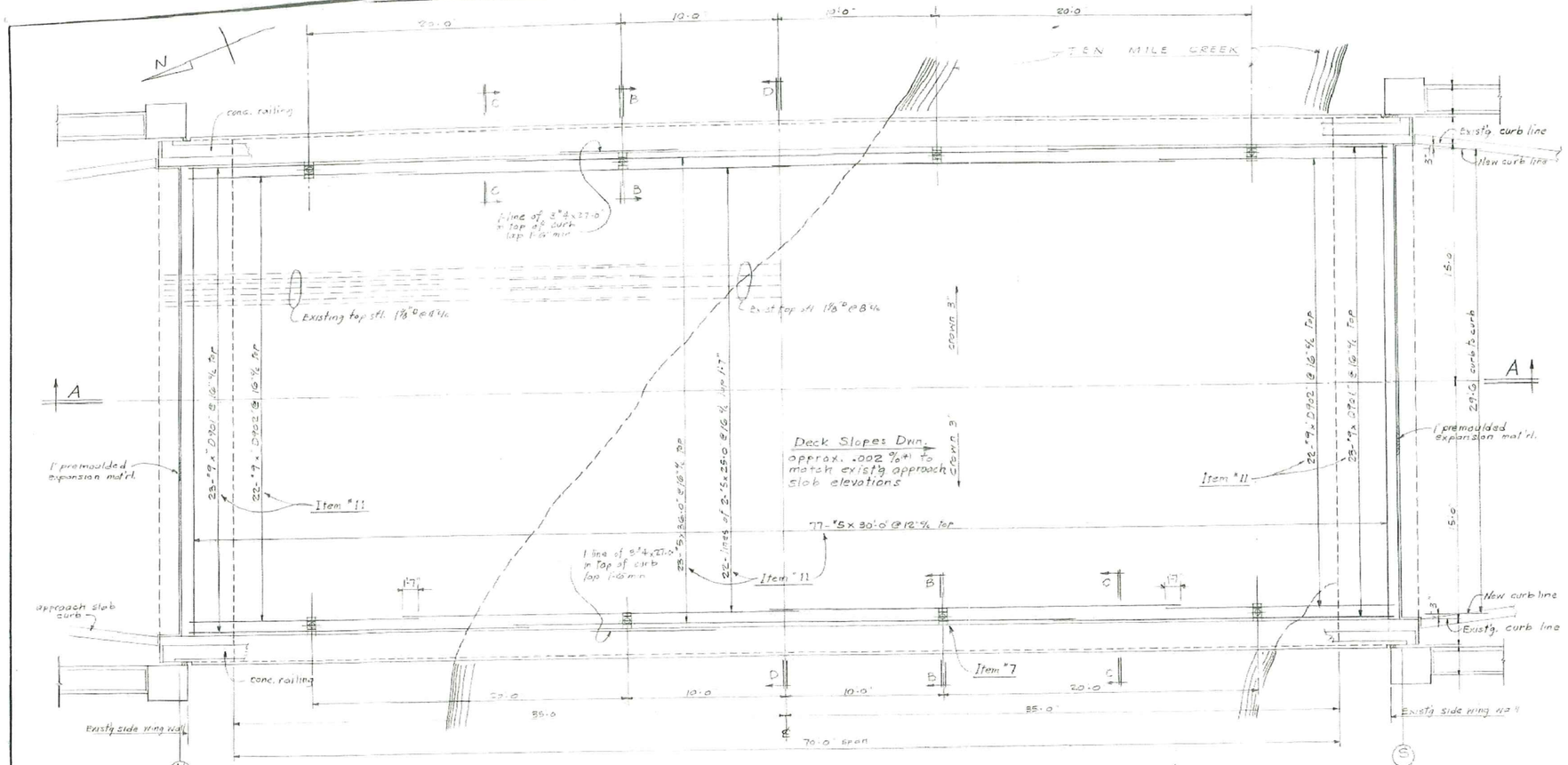

ORDER OF OPERATIONS IN REPAIRING BRIDGES DECK

Item #1. Before starting work on the bridge, install two bents in locations shown completely across the soffit of the deck capable of carrying 6 tons per lineal foot of bent. (See construction schedule for installing bents.)

Contractor shall submit a sketch of the bents he proposes to use, and shall not place heavier construction loads on the reduced deck slab than it can safely support.

Wedge such bents "sledge-hammer tight" under deck slab.

Concrete leveling pads shall bear directly on the rock bed of stream.

On completion of repairs, remove all centering and concrete leveling pads not covered by earth and haul away.

Level readings are to be taken and reported to the engineer on the soffit of the deck at the centerline of the span near each side before starting work, after centering is installed, after centering is driven tight, and at weekly intervals as work progresses. It may be necessary to raise the crown a fraction of an inch.

Item #2. Remove entire bituminous pavement (approximately 2-1/2" to 3" thick) from curb to curb and from approach slab at N. to approach slab at S.

Item #3. Remove original concrete wearing surface that underlies bituminous pavement from curb to curb and from approach slab at N. to approach slab at S. (approximately 3" thick at curb to 5-1/2" thick at center of roadway.)

Item #4. Remove all disintegrated and unsatisfactory structural concrete (carefully preserving each reinforcing bar intact) from curb to curb, and cutting approximately 4" back into each curb as shown on Section BB and CC and from approach slab at N. to approach slab at S.

This cut-out shall have an absolute minimum depth of 2" below the underside of the longitudinal reinforcing bars in the top of the slab and to concrete that, in the opinion of the engineer, is sound enough to leave untouched. Should any depth be ordered more than 2" below the underside of the bars (see log of the borings through the deck) an agreement shall immediately be made upon the area and added depth involved or no extra payment requested. Such work shall be paid for at the unit price established in the contract. (See Note #4-A, on sheet 1).

Item #5. After concrete is removed, knock adhering concrete from all exposed reinforcing bars as well as can be done manually with a mason hammer and wire brush the bars.

Item #6. Bars must not be damaged during this work or the contractor will be required to furnish replacements with welded splices at his expense.

If center top bars fall out of, or are removed from existing vertical stirrups, retie in place.

Item #7. Drill 4 holes 6" diameter completely through the existing deck in each gutter at approximately 20'-0" centers for new deck drains.

Item #8. Drill Grouting holes along cracks and into porous and honeycombed areas. Pump grout to fill voids and drilled hole. Estimate 100 holes (Spec. 2, Sheet 3).

Item #9. With brooms and high pressure air and water hoses, sweep and blow all debris off the cut-down surface of the deck.

Item #10. Install 8 drains in the drilled holes of Item 7, level up and grout in place.

Item #11. Furnish and install new A432 deformed reinforcing bars bent to details shown and located and wired in place in accordance with dimensions given. Supply an adequate number of proper supports for the mat of steel.

At the same time, line up and adjust existing reinforcing bars and fasten all together into a secure framework.

Item #12. Coat entire cut-down surface of the deck with an approved bonding compound.

Item #13. Place new Class C structural concrete of at least 4000 psi cylinder test strength on top of cut-down surface of deck slab from curb to curb, including reforming of new curb facing, and from approach slab at N to approach slab at S.

Special care is to be taken in patching and realigning curbs.

Screed off wearing surface to form a rise of approximately 3" from gutter to crown. Wearing surface to match contour of approach slab on Line N and on Line S. The crown centerline is to slope on a straight grade from N to S. Gutters also to slope on a straight grade from N to S but neatly trowelled to shed water into each drain.

2/4

LUCAS COUNTY BRIDGE No. 106
SILICA DRIVE OVER TEN MILE CREEK
SYLVANIA, OHIO — LUCAS COUNTY

PLAN & LONGITUDINAL SECTION

RAYMOND C. REESE ASSOCIATES
CONSULTING ENGINEERS — TOLEDO, OHIO

DESIGNED	DRAWN	TRACED	CHECK	DATE	REV. DWG.	JOB. No.	SHEET
T.L. & R.R.	T.A. & G.M.	T.A. & G.M.	T.L. & R.R.	12-1-61		5007	2 of 4

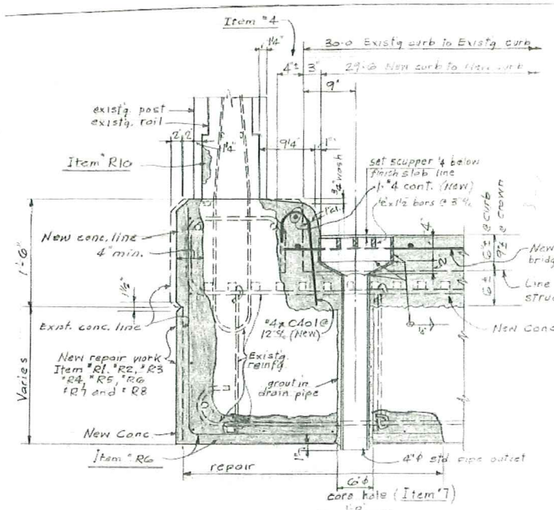

TOP OF DRAIN SCUPPER

Material - Structural Steel

SECT. "B-B"

1"=1'-0"

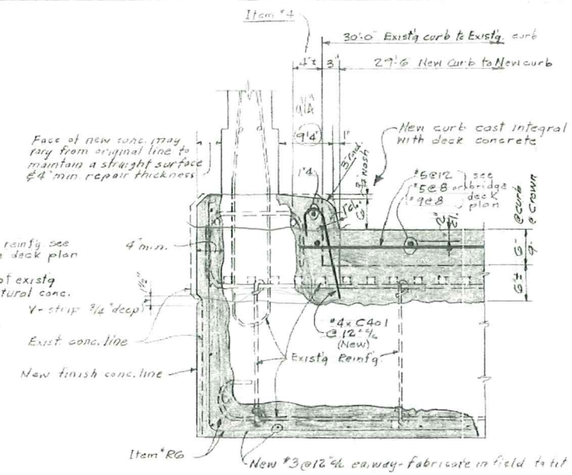

SECT. "C-C"

1"=1'-0"

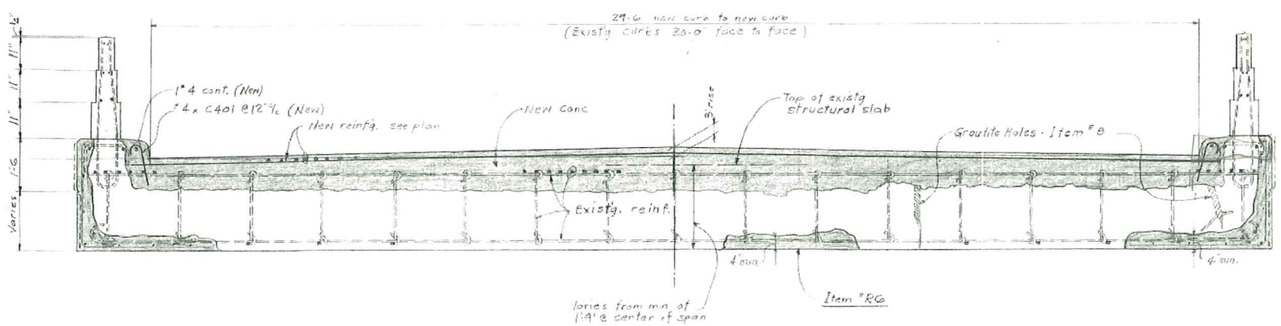

SECT. "D-D"

1"=1'-0"

SPECIFICATIONS FOR WORK NOT COVERED BY

"STATE OF OHIO DEPARTMENT OF HIGHWAYS CONSTRUCTION MATERIAL SPECIFICATIONS, JANUARY 1, 1967"

Spec. 1 - Preplaced Aggregate Concrete

This item includes all labor, materials and equipment to place a graded coarse aggregate into the forms and then consolidate into Preplaced Aggregate concrete with special non-setting shrinkage Groutite mortar. The materials and workmanship shall result in a product equal to that produced by the Lee Turzillo Contracting Company, Brecksville, Ohio. This concrete is to be used for repairs to sides and soffits of the deck. The minimum thickness of the concrete shall be 4".

The coarse aggregate shall meet the requirements of ASTM Designadion C-33. It shall be so graded as to have the minimum void content.

The Groutite mortar shall consist of Portland Cement, Type I, or Type II, Mineral Filler, Interaid, sand and water so proportioned and mixed as to produce a mortar capable of maintaining the solids in suspension without appreciable water gain, yet which may be pumped without difficulty and which will penetrate and fill completely the voids in the aggregate mass and surface voids in the old concrete. These materials shall be so proportioned as to produce a concrete strength of 4000 psi at 28 days.

Materials

1. Coarse aggregate and fine aggregate shall meet the requirements of current ASTM standard C-33 except as to grade. All fine aggregate shall pass a No. 8 sieve and shall have a fineness modulus of not less than 1.40 nor more than 2.00.
2. Portland Cement shall conform to Federal Specifications SSC-192 for ceaments Portland or current ASTM standards.
3. Mineral filler shall be a finely powdered material composed essentially of amorphous silica, alumina and iron which possess the property of combining with lime that is liberated during the process of hydration of Portland cement. The Mineral Filler shall contribute markedly to the later-age strength and impermeability of the concrete.
4. Interaid shall impart to the mortar the properties of a colloidal suspension to prevent the constituents of the mortar from settling, thereby assuring complete bond on the undersides of the aggregate particles and their reinforcement. Interaid shall meet the requirements of Federal Specifications CRD-C 566, Reference 2b, plus having the following properties.

a. Tends to hold solids in suspension and increase pumpbility of the concrete mortar.
b. Reduces bleeding.
c. Eliminates setting shrinkage.
d. Reduces water requirements.
e. Controls setting time.
f. Increases compressive strength and durability of the concrete mortar by a minimum of 20 per cent.

Interaid shall be the same as that produced by Grout Supply Company, Brecksville, Ohio.

Construction

The coarse aggregate shall be deposited in the forms in such a manner that the grading of the aggregate in place will be as uniform as possible. Only approved mixing and pumping equipment shall be used in handling the mortar. All oil or other rust inhibitors shall be removed from the mixing drums, stirring mechanisms, and other portions of the equipment in contact with the mortar before the mixers are used. All materials shall be accurately measured as they are fed into the mixer. The time of mixing shall be such as to produce an homogenous mortar of the desired consistency. If there is a lapse in operation, the mortar shall be recirculated through the pump, or through the mixer, drum or agitator and pump.

All pumping shall be done slowly and in such a manner as to fill completely all voids in the coarse aggregate. The pumping shall continue until excess air and water have been expelled through vents at the top of the forms. Forms shall be true to line and grade of the original structure and be constructed of wood or steel, rigid enough to prevent objectionable deflection!

Preplaced Aggregate Concrete shall be cured immediately upon stripping the forms by an approved curing compound or by continuous setting for a minimum period of 7 days.

The contractor shall furnish records of past successful experience in performing this type of work and records and data to prove conclusively that the resulting work or improvement will meet in all respects the quality and properties required by these specifications. This contractor shall list and be able to show actual jobs successfully completed utilizing these methods. He shall have had a minimum of ten years experience specializing in this type of work. No workman, mixer man, pump man or insert man shall be deemed experienced unless he has done considerable work on other contracts where the work was of similar type to that specified herein or has otherwise proved his qualifications to the satisfaction of the engineer on other comparable work. If requested by the engineer, the contractor shall submit names of superintendent and keymen to be used along with their experience records and references to establish their qualifications to the satisfaction of the engineer.

The contractor performing this work shall provide in his bid the cost of a qualified engineer or experienced keyman to maintain proper control during this phase of the work. This man shall submit to the engineer on a daily basis the following information:

1. Time of efflux of material being placed.
2. Report on making 6 x 12 test cylinders.
3. Compressive test results on test cylinders.
4. Location and extent of repairs being made.

Spec. 2 - Groutite Holes

This item consists of drilling and grouting holes into cracks or porous and honeycombed areas. Holes shall be a minimum of 1-3/4" diameter and shall be placed to such depth as field conditions warrant. Every fifth hole drilled shall be cored so that the condition of the concrete may be examined.

Grouting shall consist of the flushing, pressure testing with air and/or water and pumping under pressure a special Groutite grout into the drilled and porous areas. Groutite grout shall have the characteristics of being able to penetrate small voids and cracks in the existing concrete, have an itial setting time of greater than 3 hours and have absolutely no setting shrinkage. Groutite grout in general shall conform to the written specifications for Groutite grout as produced by Grout Supply Company, Brecksville, Ohio.

Payment shall be made on the number of holes actually drilled and fully grouted, which will constitute full compensation for furnishing labor, equipment, tools and incidentals necessary to complete this item.

3/4

LUCAS COUNTY BRIDGE No. 106
SILICA DRIVE OVER TEN MILE CREEK
SYLVANIA OHIO - LUCAS COUNTY

DETAIL SECTIONS

RAYMOND C. REESE ASSOCIATES
CONSULTING ENGINEERS TOLEDO, OHIO

DESIGNED	DRAWN	TRACED	CHECK	DATE	REV. DWG.	JOB No	SHEET
TL & RR	TA & GM	TA & GM	TL & RR	12-1-67		5007	3 of 4

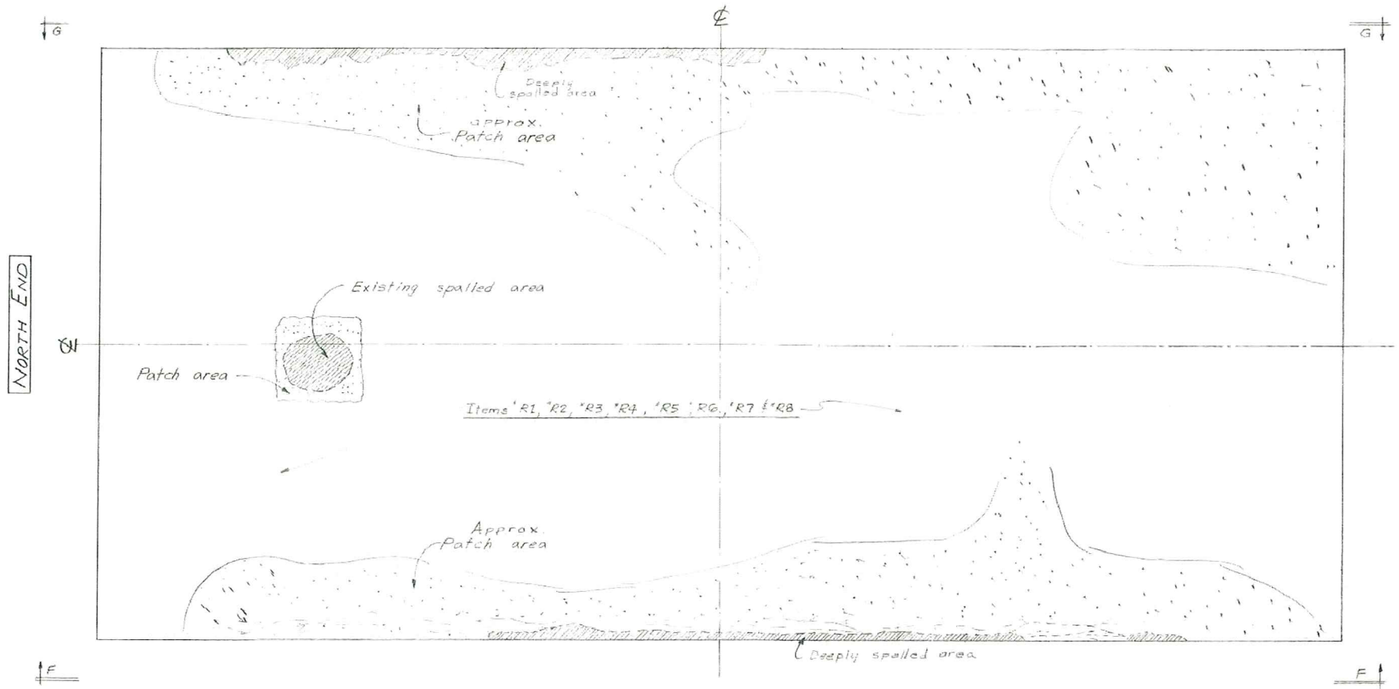

REFLECTED VIEW OF BRIDGE SOFFIT

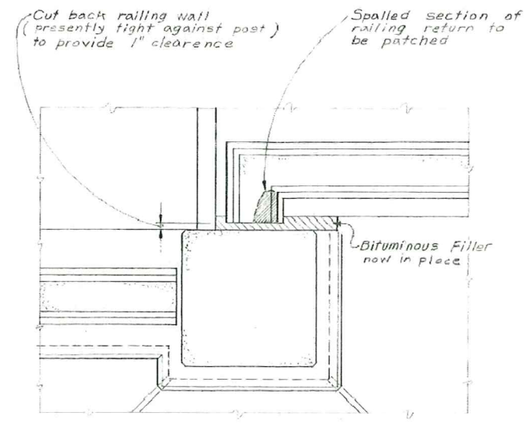

PLAN "E-E"

1" = 1'-0"

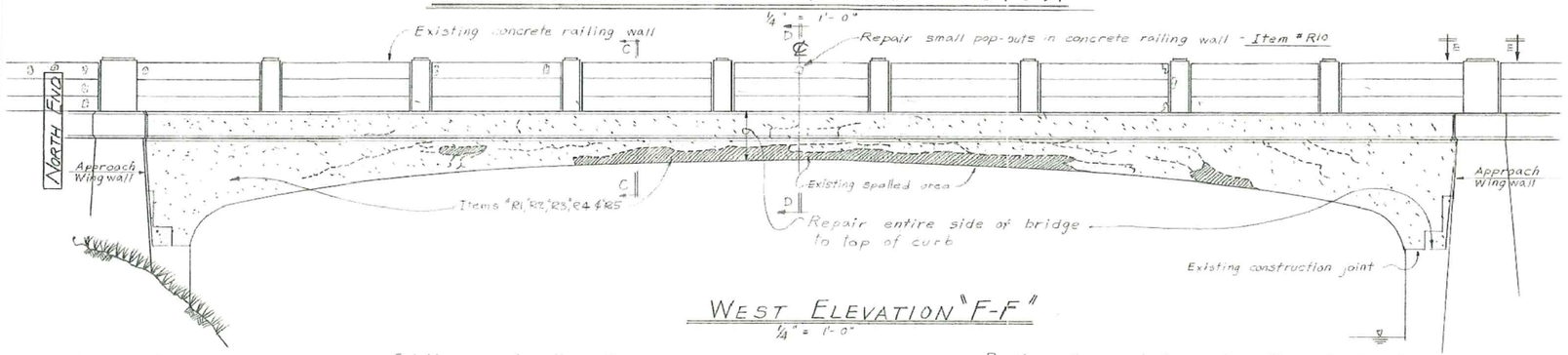

WEST ELEVATION "F-F"

1/4" = 1'-0"

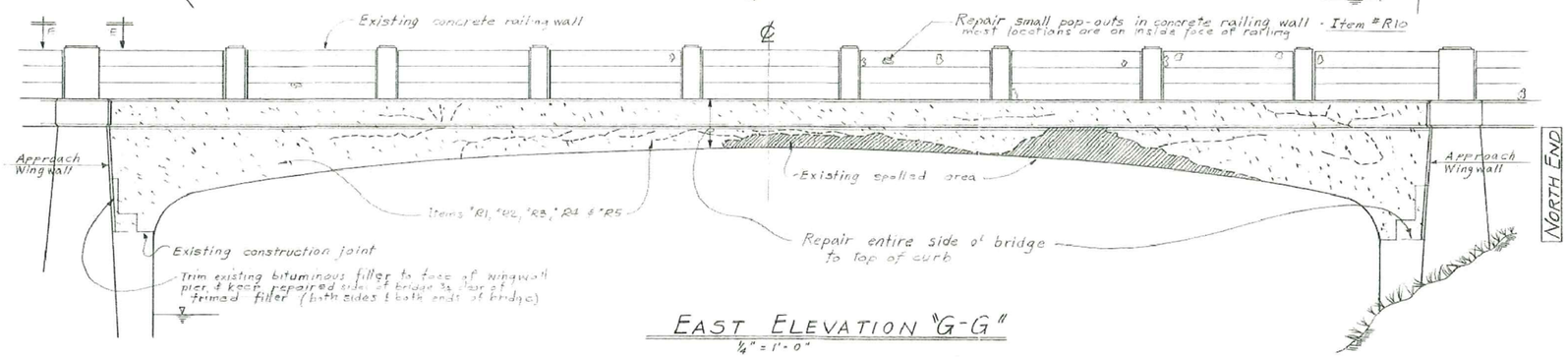

EAST ELEVATION "G-G"

1/4" = 1'-0"

ORDER OF OPERATIONS IN REPAIRING SIDES AND SOFFIT OF BRIDGE

ITEM R1 Remove such concrete in sides and soffit of bridge as is unsound, deteriorated or gives a dull thud under impact by a mason's hammer.

ITEM R2 After concrete is removed, knock adhering mortar off exposed reinforcing bars with a mason's hammer and take off any loose, flaky rust with a wire brush.

ITEM R3 Any bars damaged during these operations will have to be repaired with welded splice bars at the contractor's expense.

ITEM R4 Entire preparation and repair shall follow the methods prescribed in the reference in General Note #1 and "Preplaced Aggregate Concrete," Specification - Sheet 3.

ITEM R5 After all unsound and deteriorated concrete is removed and remaining sound concrete approved by the engineer, cut a square shoulder at least 1-1/2" deep all around area that is to be repaired.

ITEM R6 Place one layer of #3 bars at 12" each way over the entire areas to be repaired. Install 3/8" expansion bolts at 18"c/c in each direction, in the sound concrete for dowel action and to fasten the reinforcing. Where existing reinforcing is exposed and extends into sound concrete, it may be used in place of the expansion bolts.

ITEM R7 Form all surfaces to be repaired and fill cut-out areas with "Preplaced Aggregate Concrete."

ITEM R8 For basis of payments, estimate the following quantities of work. Final payment will be adjusted at the unit prices established in the contract.

Full side area above existing construction joint in abutment walls.

800 sq. ft. of soffit patching.

ITEM R9 Cut back the existing concrete railing return, on both the east and west sides at the south end of the structure to give a one inch clearance to the wingwall railing post. Patch spalled section of the railing return using an epoxy-resin bonding agent.

ITEM R10 Chip out, clean and patch concrete railing walls where concrete is spalled, usually exposing a reinforcing bar. Clean rust off exposed bars, use epoxy-resin bonding agent and patch concrete to match color and finish of existing railing.

4/4

LUCAS COUNTY BRIDGE No. 106
SILICA DRIVE OVER TEN MILE CREEK
SYLVANIA OHIO LUCAS COUNTY

SIDE ELEVATIONS & DECK SOFFIT PLAN

RAYMOND C REESE ASSOCIATES
CONSULTING ENGINEERS TOLEDO, OHIO

DESIGNED	DRAWN	TRACED	CHECK	DATE	REV. DWG.	JOB NO	SHEET
T.L. & R.R.	T.A. & G.M.	T.A. & G.M.	T.L. & R.R.	12-1-67		5007	4 of 4

W.P.A. PROJECT Nº 5434

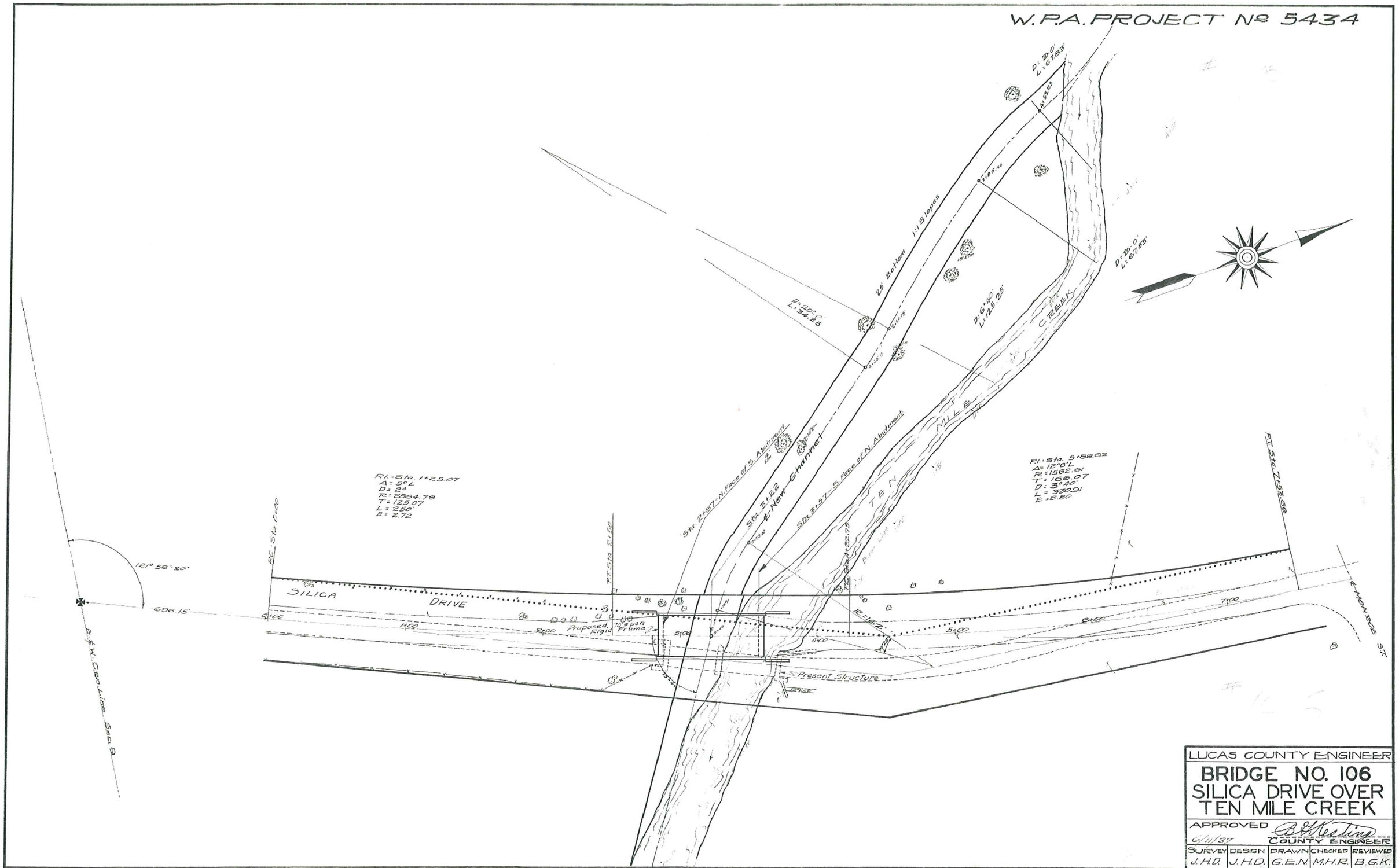

LUCAS COUNTY ENGINEER

BRIDGE NO. 106
SILICA DRIVE OVER TEN MILE CREEK

APPROVED B. K. Keshine
6/11/37 COUNTY ENGINEER

SURVEY	DESIGN	DRAWN	CHECKED	REVIEWED
J.H.D.	J.H.D.	G.E.N.	M.H.R.	B.G.K.

Pocket #12 - Folder #7

BRIDGE #106

W.P.A. PROJECT № 5434

LONGITUDINAL SECTION AT ℄

Scale: 1/4" = 1'-0"

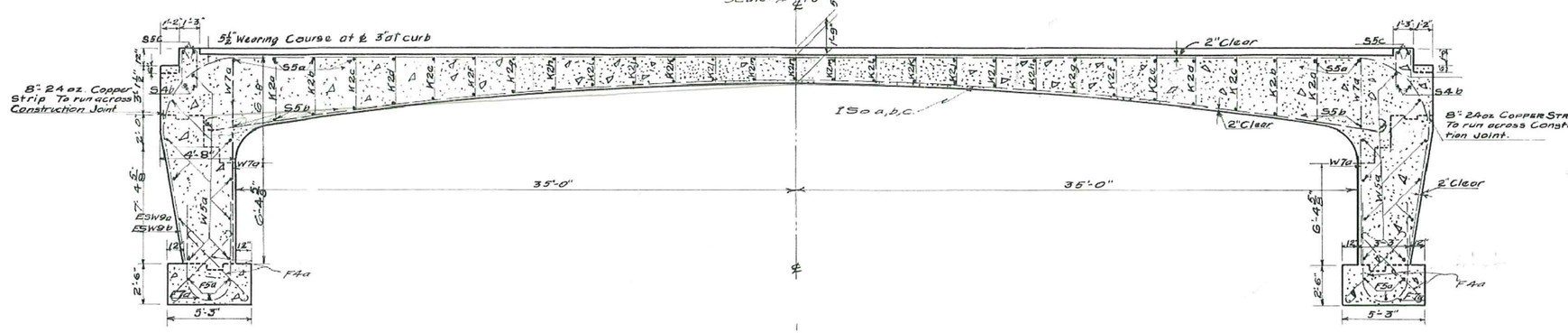

DEVELOPED PLAN OF MAIN REINFORCING

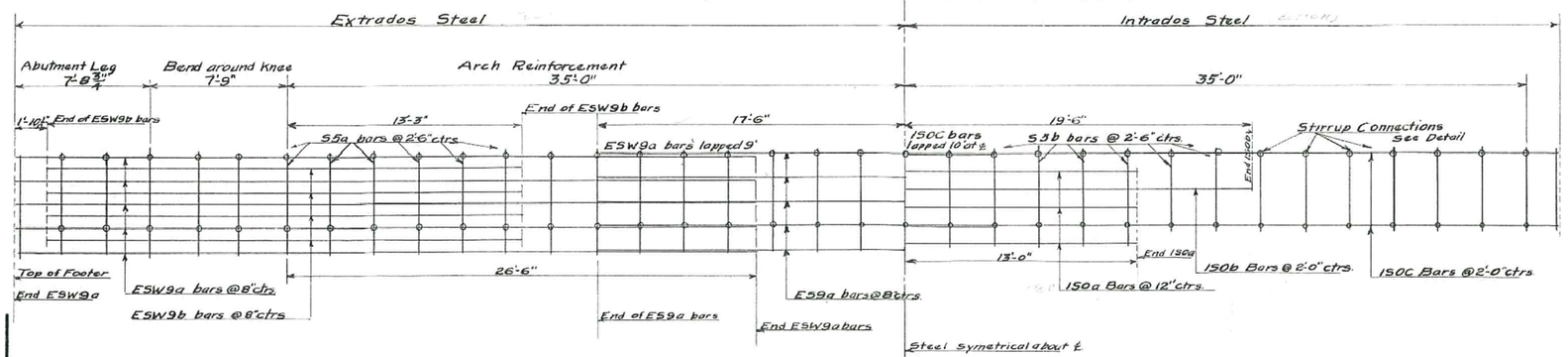

HALF ELEVATION ABUT. LEG SHOWING STEEL IN FRONT FACE

Scale: 3/8" = 1'-0"

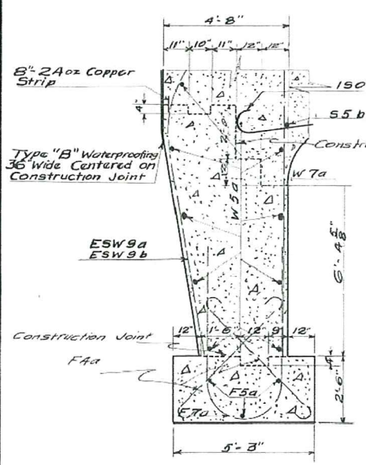

TYPICAL X-SECTION ABUTMENT LEG
Scale: 3/8" = 1'-0"

HALF ELEV. ABUT. LEG SHOWING STEEL IN BACK FACE

Scale: 3/8" = 1'-0"

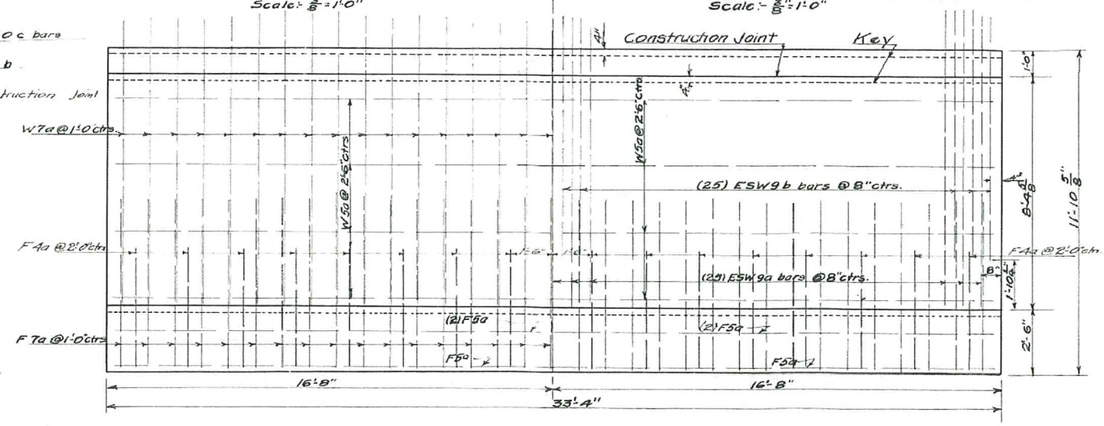

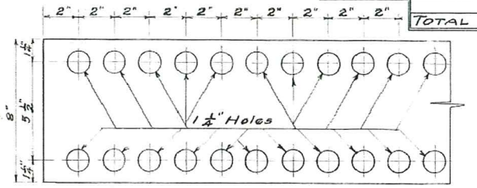

DETAIL OF 8" 24 oz COPPER STRIP
To run across Construction Joint Scale: 3" = 1'

STEEL LIST

Mark	Size	No.	Length	Weight	Shape
FRAME STEEL					
ESW9a	1 3/8" □	98	41'-11 3/8"	17,703	bt
ESW9b	1 1/8" □	100	26'-10"	11,562	bt
ES9a	1 1/8" □	49	33'-0"	7,880	st
S4b	3/4" ϕ	29	34'-4"	1495	bt
S5a	3/4" ϕ	29	38'-8½"	1686	bt
S5C	3/4" ϕ	4	32'-10"	197	st
S4a	5/8" ϕ	6	26'-2"	164	st
S4b	5/8" ϕ	4	32'-10"	137	st
S4C	5/8" ϕ	66	7'-3"	499	bt
150a	1 1/2" □	34	26'-0"	4697	st
150b	1 1/2" □	16	39'-0"	3215	st
150C	1 1/2" □	34	42'-10"	7737	bt
CAa	5/8" ϕ	12	28'-8"	360	st
STIRRUPS					
K2a	1/2" ϕ	34	4'-9"	108	bt
K2b	1/2" ϕ	34	4'-5"	100	bt
K2c	1/2" ϕ	34	4'-0"	91	bt
K2d	1/2" ϕ	34	3'-9"	85	bt
K2e	1/2" ϕ	34	3'-5"	78	bt
K2f	1/2" ϕ	34	3'-2"	72	bt
K2g	1/2" ϕ	34	3'-0"	68	bt
K2h	1/2" ϕ	34	2'-9"	62	bt
K2i	1/2" ϕ	34	2'-7"	59	bt
K2j	1/2" ϕ	34	2'-6"	57	bt
K2k	1/2" ϕ	34	2'-5"	55	bt
K2l	1/2" ϕ	34	2'-4"	53	bt
K2m	1/2" ϕ	34	2'-3"	51	bt
K2n	1/2" ϕ	17	2'-3"	26	bt
ABUTMENT LEGS					
W5a	3/4" ϕ	22	32'-10	1085	st
W7a	1" ϕ	66	12'-10"	2261	st
F5a	3/4" ϕ	3	32'-10"	148	st
F7a	1" ϕ	33	14'-1½"	1245	bt
F4a	5/8" ϕ	34	6'-9"	239	"
RAILINGS & POSTS					
R2a	1/2" ϕ	28	8'-6"	159	bt
R2b	1/2" ϕ	56	7'-4"	274	st
R2c	1/2" ϕ	4	9'-5"	25	bt
R2d	1/2" ϕ	4	9'-0½"	24	bt
R2e	1/2" ϕ	4	8'-11½"	24	bt
R2f	1/2" ϕ	4	8'-4½"	22	bt
R2g	1/2" ϕ	16	8'-0½"	86	bt
R2h	1/2" ϕ	32	6'-10½"	147	st
R2c1	1/2" ϕ	4	9'-5"	25	bt
R2d1	1/2" ϕ	4	9'-0½"	24	bt
D4a	3/8" ϕ	40	9'-9"	407	bt
D4b	3/8" ϕ	16	10'-1½"	169	bt
D5a	3/4" ϕ	130	9'-3½"	1214	bt
WINGS					
W4a	5/8" ϕ	12	14'-0"	175	st
W4b	5/8" ϕ	64	14'-0"	935	st
W4c	5/8" ϕ	12	17'-3"	216	st
W4d	5/8" ϕ	16	15'-0"	250	st
W4e	5/8" ϕ	16	2'-0"	33"	st
FW6a	7/8" ϕ	36	14'-10"	1091	bt
FW6b	7/8" ϕ	38	11'-4"	880	bt
FW4a	5/8" ϕ	16	17'-3"	288	st
FW4b	5/8" ϕ	38	6'-2"	245	bt
P4a	5/8" ϕ	4	15'-8½"	66	bt
P4b	5/8" ϕ	4	14'-7"	61	bt
P4c	5/8" ϕ	4	13'-4"	56	bt
P4d	5/8" ϕ	4	12'-3½"	51	bt
P4e	5/8" ϕ	4	11'-2"	47	bt
P4f	5/8" ϕ	4	10'-0"	42	bt
P4g	5/8" ϕ	4	8'-10½"	37	bt
P4h	3/8" ϕ	36	13'-9"	516	st
FP5a	3/4" ϕ	18	6'-0"	162	bt
		TOTAL		71,226#	

BENDING DIAGRAMS

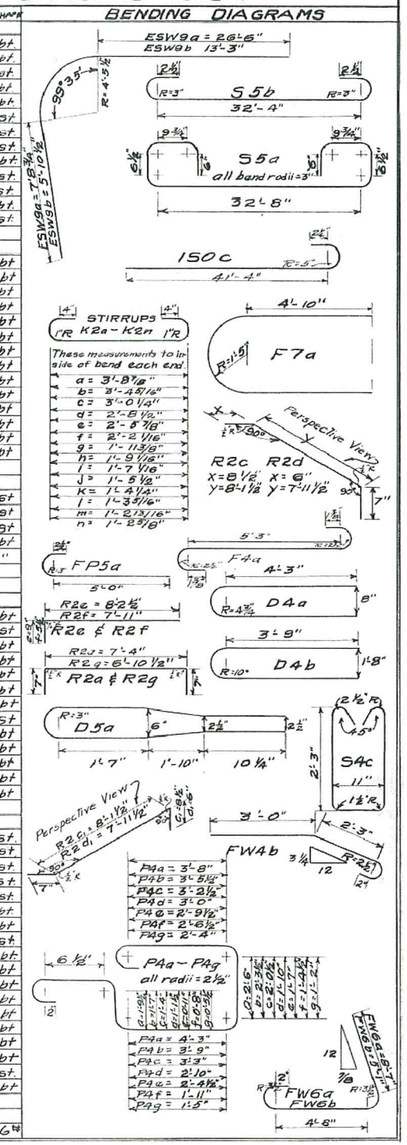

LUCAS COUNTY ENGINEER

BRIDGE NO. 106
SILICA DRIVE OVER TEN MILE CREEK

APPROVED 6/11/37 — COUNTY ENGINEER

DESIGNED	DRAWN	TRACED	CHECKED	REVIEWED
J.H.D.	J.H.D.	GEN	M.H.R.	M.H.R.

W.P.A. PROJECT No 3454

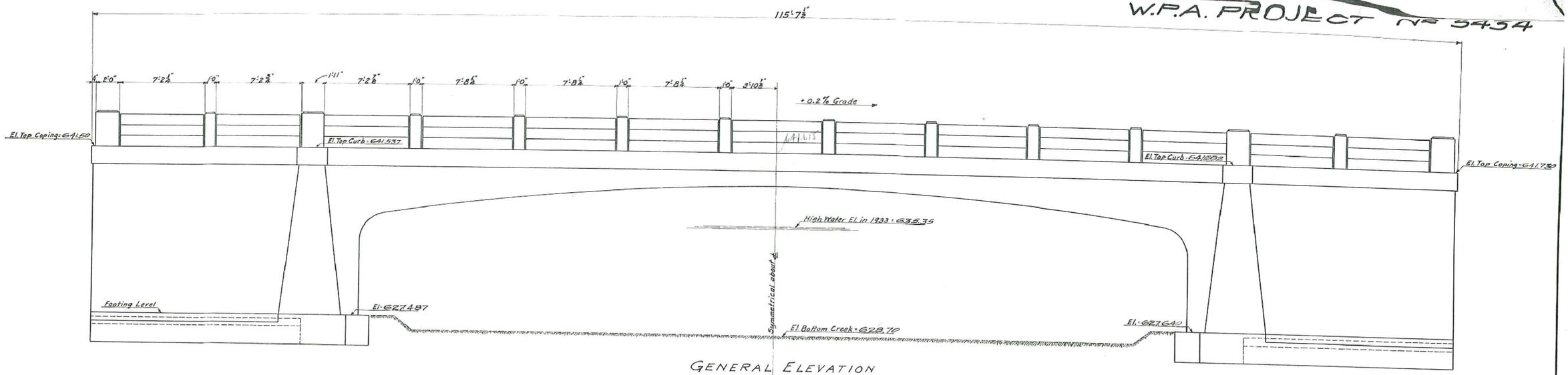

GENERAL ELEVATION
Scale - ¼" = 1'-0"

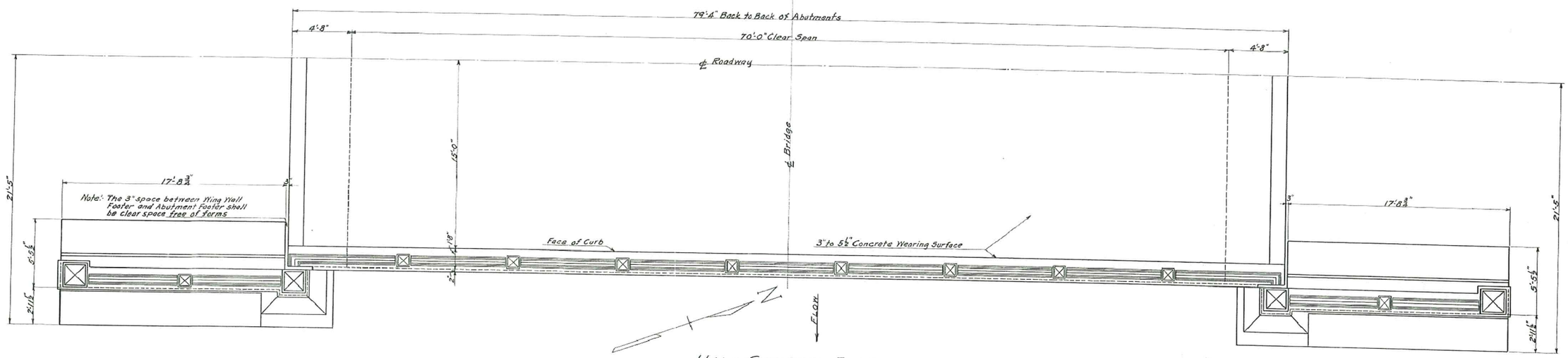

HALF GENERAL PLAN
Scale - ¼" = 1'-0"

GENERAL NOTES

PROPOSED STRUCTURE :- is a reinforced concrete rigid frame bridge - 70' clear span

PRESENT STRUCTURE :- Shall be dismantled and neatly piled at the site of the work

PRESENT ABUTMENTS AND PIERS :- Shall be disposed of at the direction of the engineer

CONCRETE MIX :- All frame concrete above the footers not including posts, rails and wearing course shall be 1:6 mix. Frame footers shall be 1:6½ mix. Posts and rails shall be 1:6½ mix. Wearing Course shall be 1:5½ mix. All Concrete in Wings except rails and posts shall be 1:6½ mix.

CONSTRUCTION JOINTS :- Will be allowed only where shown on the plans. It will be noted that the entire arch above the joints shown shall be made in one pour. This shall be rigidly adhered to.

BACKFILL :- In back of the abutments shall be made and firmly tamped before any load is applied to the bridge, This shall be done according to County Specifications.

APPROACH SLABS :- Approach slabs shall not be put in until after the fill in back of the abutments has been compacted to the satisfaction of the Engineer

LOADING :- This bridge is designed for H-20-33 Loading

The frame structurally shall be entirely separated from the wings. The plans shall be followed rigidly

ESTIMATED QUANTITIES

COFFERDAMS, SHEETING & PUMPING	LUMP SUM
FOUNDATION EXCAVATION DRY	346 CU. YDS.
" " WET	0 " "
ROCK EXCAVATION	662 " "
1:6 CONCRETE - ARCH	291.2 " "
1:6 " - ABUTMENT LEGS	89.1 " "
1:6½ " - FOOTERS, FRAME & WINGS	89.6 " "
1:6½ " - WALLS & WING WALLS	91.6 " "
REINFORCING STEEL	74,949 LBS.
REMOVAL OF EXISTING MASONRY	188 CU. YDS.
TYPE 'B' WATERPROOFING	22.2 SQ. YDS.
8"- 24 OZ. COPPER STRIP	66.67 LIN. FT.
REINFORCED CONCRETE-SOLID RAIL 18.3 CU. YDS.- 1:5½ MIX	238 LIN. FT
2" PREMOULDED BITUMINOUS FILLER	18 SQ. YDS
3" TO 5½" CONCRETE WEARING COURSE - 1:5½ MIX	252 SQ. YDS.

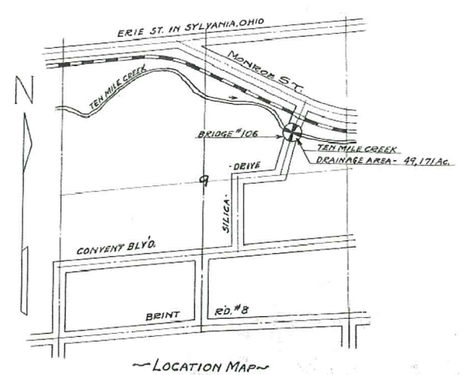

~LOCATION MAP~
Scale 4" = 1 Mi

BRIDGE NO. 106 SILICA DRIVE OVER TEN MILE CREEK

TRACED	DESIGN	DRAWN	CHECKED
E.L.H.	J.H.D.	J.H.D.	M.H.R.

APPROVED	DATE
C. B. Keating	6/11/37
LUCAS COUNTY ENGINEER	
Barbara Kilby	6/11/37
John Kelly	6/11/37
Roy J. Shenker	6/11/37
LUCAS COUNTY COMMISSIONERS	

W.P.A. PROJECT № 5434

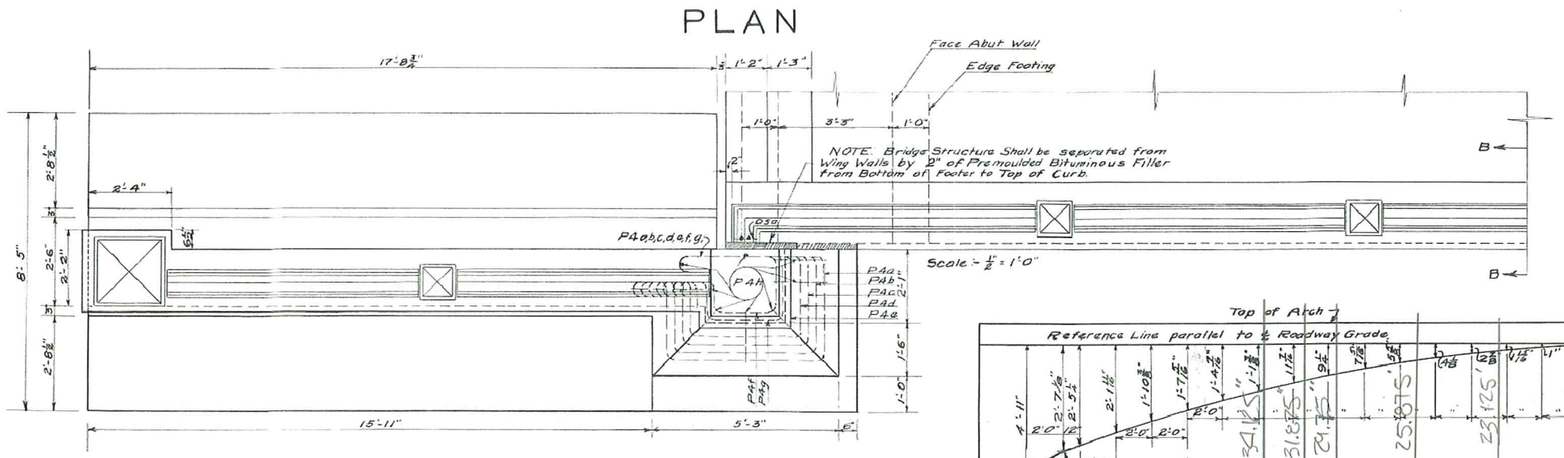

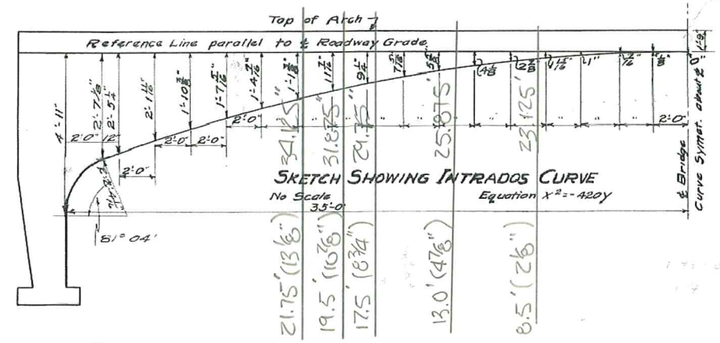

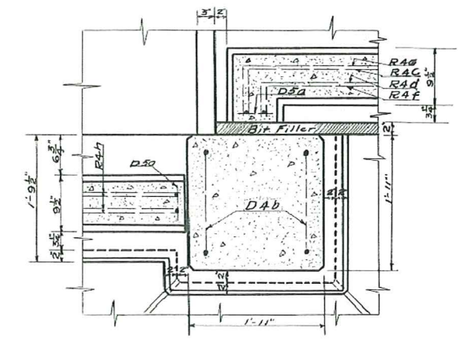

SECTION C-C

Scale - 1" = 1'

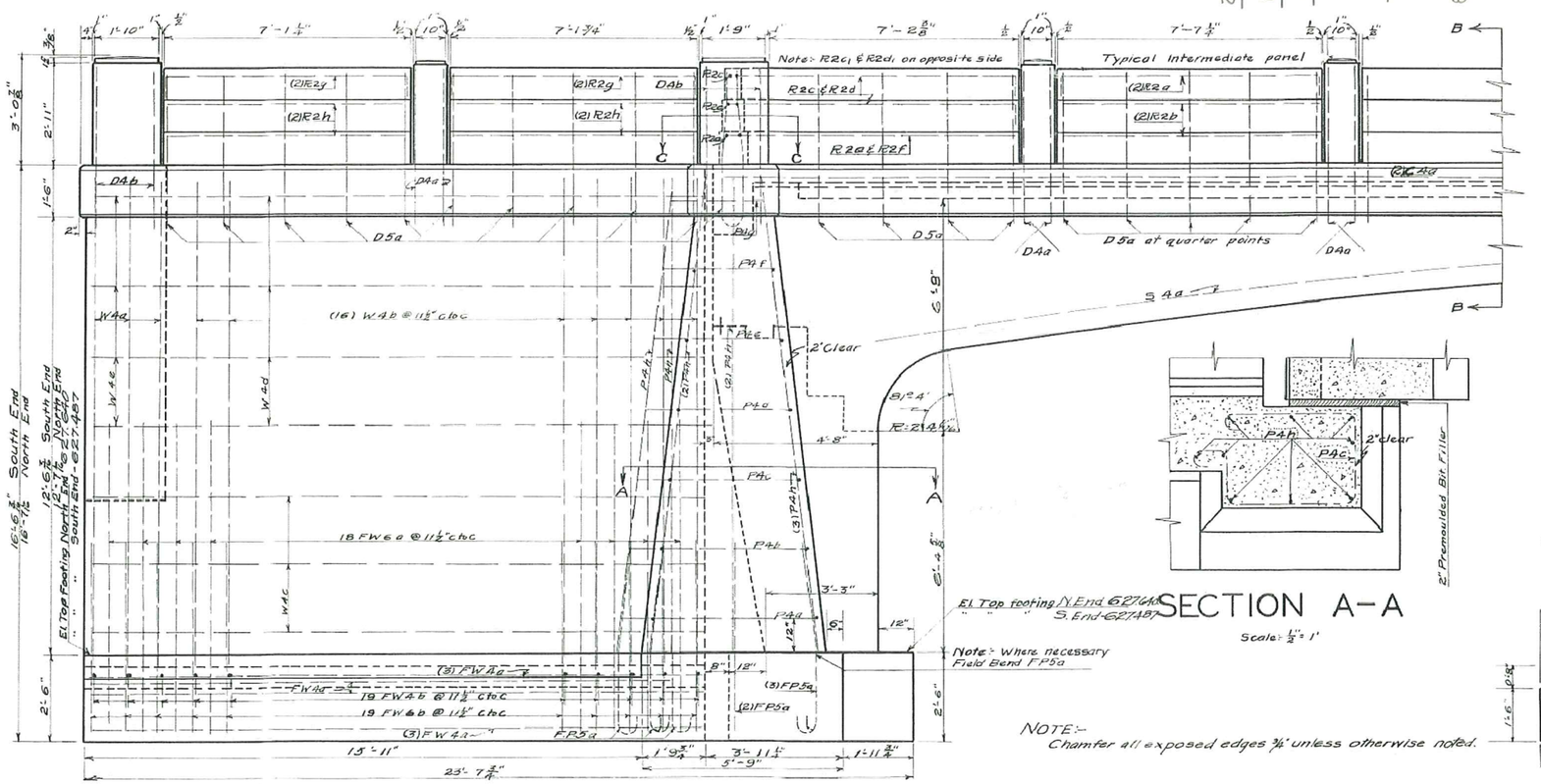

PART SIDE ELEVATION

Scale:- 1/2" = 1'

SECTION A-A

Scale: 1/2" = 1'

NOTE:-
Chamfer all exposed edges 3/4" unless otherwise noted.

END ELEVATION

Scale 1/2" = 1'

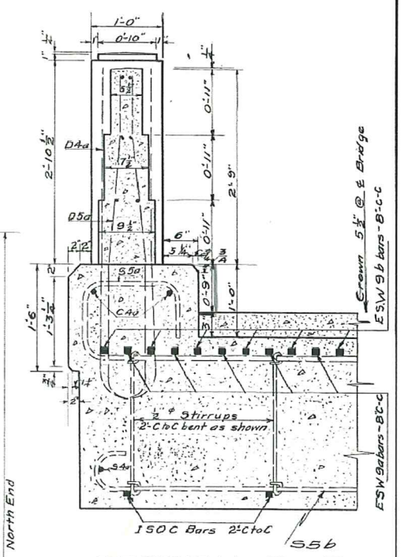

SECTION B-B

Scale :- 1" = 1'

LUCAS COUNTY ENGINEER				
BRIDGE NO. 106 SILICA DRIVE OVER TEN MILE CREEK				
APPROVED 6/11/57 B. J. Keating COUNTY ENGINEER				
DESIGNED J.H.D.	DRAWN J.H.D.	TRACED G.E.N.	CHECKED M.H.R.	REVIEWED M.H.R.

Appendix E:
Previous Load Rating Report (DGL, 2016)

Ohio Department of Transportation
Superstructure Load Rating
SFN-4862473

Bridge Number: LUC-MILIC-0106
Silica Drive over Ten Mile Creek
2016

SHEET NO.: 3 OF

DESIGN BY: AEH DATE: 6/1/2010 CHECKED BY: SAM DATE: 6-3-10

SUBJECT: Lucas County Load Rating

REFERENCE: NOTE FILE: COMM. NO.: 10021

DGL CONSULTING ENGINEERS

Lucas County SFN-4862473 Load Rating

Bridge # 106

Construction Date = 1937 (Per Exist. Plans) ✓ 1938 Construction, Per Field Inspection Notes.

Bridge Resurfacing Rehab. = 1968 (Per Exist Plans & BR-86) ✓

ODOT Dist. 2 = B

Bars Data File = R 486247 (Per BDM 909.3)

Structure Type : Single Span Concrete Frame

Roadway Width = 29'-6" F/F Curb ✓

Clear span = 70' ✓

Min. Structural Slab Thickness = 1.75' ✓

Max. " " (3.125' + 1' - 0.46') = ~~3.67'~~ +2

Per Original Plans 5.67' (68")

Ave. Structural Conc. Removed = 6"± ✓ (Assume 6"± concrete that was put back & exist. Concrete acts Homogeneous as one structure; to Match original Construction)

New Conc. Deck = 9"± ✓ @ crown

- LOAD RATING WAS PERFORMED BY DGL IN BARS-PC IN 2010. FIELD CONDITIONS VERIFIED; IMPORT BARS-PC DATA INTO BrR.

For Rating Calculation Use: Min. structural Slab Thickness = 1.75'
Max. " " " = ~~3.67'~~

Consider new 9"± Deck as non-composite ✓

Design span length: $70' + \frac{(1.75' + 3.67')}{2} = 72.71'$ Use 73' (AASHTO 3.24.1.1) ✓

SHEET NO.: 4 OF

DESIGN BY: DATE: CHECKED BY: SAM DATE: 6-4-10

SUBJECT:

REFERENCE: NOTE FILE: COMM. NO.:

DGL CONSULTING ENGINEERS

* Model Frame structure in Bars-PC as a 3-span Continuous Slab structure with Fixed End supports. This is similar and more conservative than modeling as a single span with Fixed supports. See attached moment & shear Diagrams.

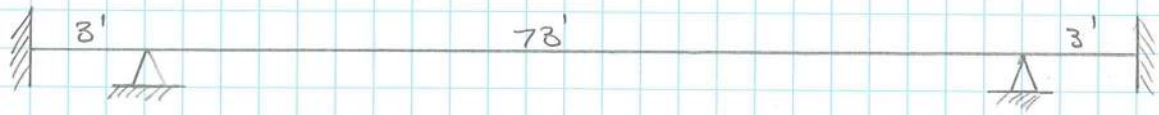

L.L. Distribution Factor = 1/E

E = Distribution width = 4 + 0.06S ≤ 7 AASHTO 3.24.3.2

S = Design span

E = 4 + 0.06(73') = 8.38 ≮ 7 ∴ E = 7

L.L.D.F. = 1/7 = 0.143

Superimposed D.L.

- Curb = 6.75"/12 × 2.083' × 150 lb/ft³ = 176 lb/ft

- Conc. Railing ⇒ Conc. Int. Posts ≅ 1'×1'×3'×150 lb/ft³ × 8 = 3,600 lb

Conc. Int. Panels ≅ 7.69'×2.75'×(5.5+7.5+9.5)'/(3×12) × 7 × 150 lb/ft³ = 13,879 lb

Conc. Ext. Panels ≅ 7.25'×2.75'×(5.5+7.5+9.5)/(3×12) × 2 × 150 lb/ft³ = 3,739 lb

Total Railing = 21,218 lb / 73' = 291 lb/ft

- New Conc. Deck = ~~9~~ 8"/12 × 16.75' × 150 lb/ft³ = ~~1885~~ 1675 lb/ft

VARIES FROM 6" TO 9" USE 2/3 OF DIFFERENCE TO BE CONSERV. (8")

$\frac{44'' - 21''}{351} = 0.657''/ft$

W.P.A. PROJECT № 5434

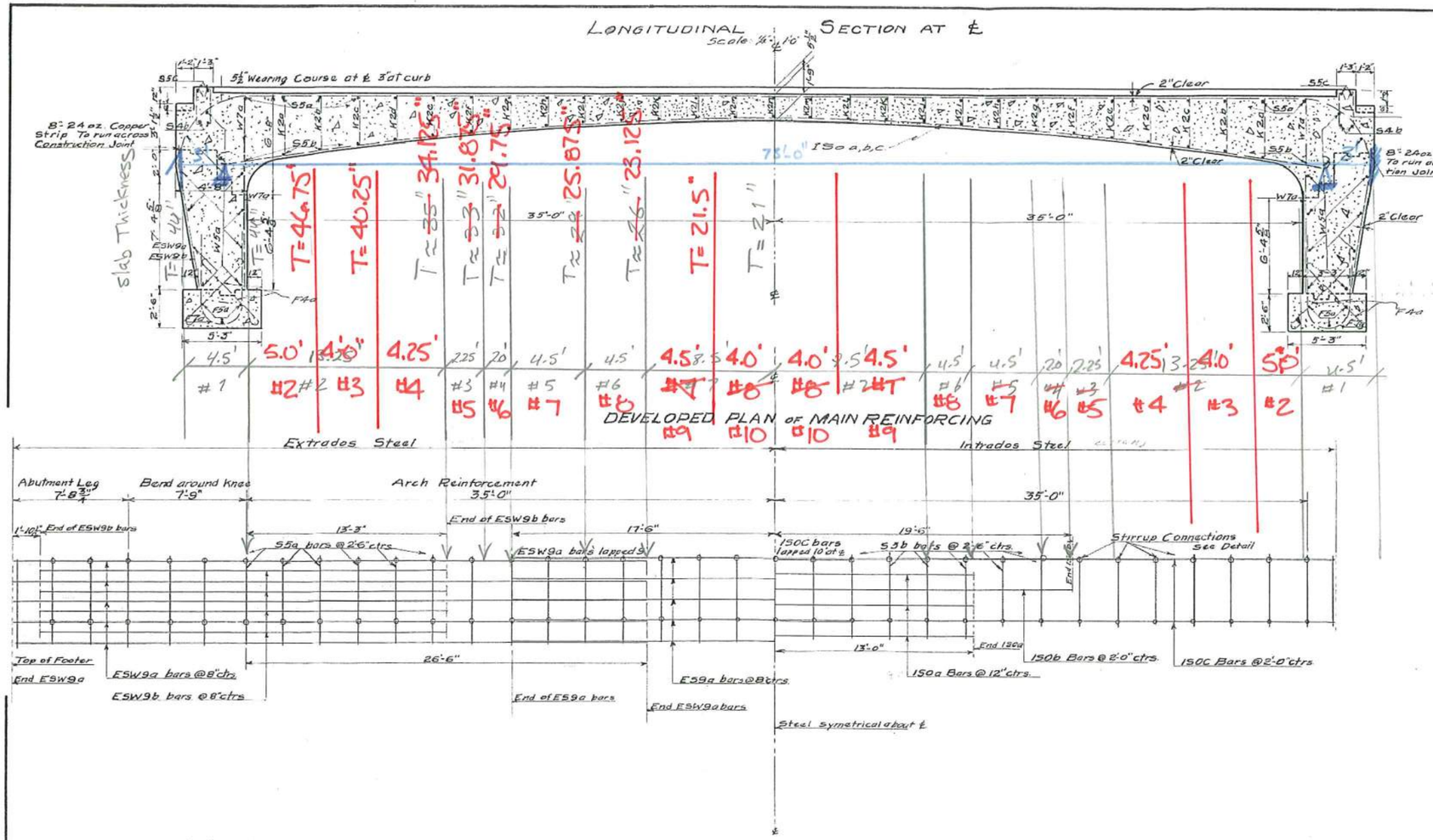

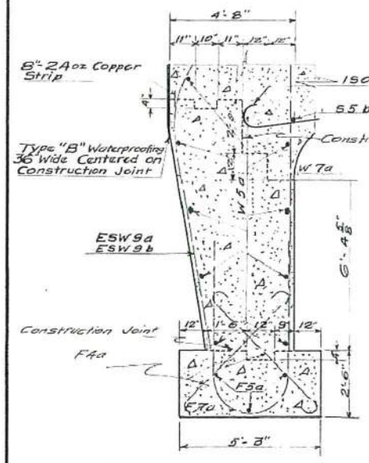

TYPICAL X-SECTION ABUTMENT LEG
Scale: ⅜" = 1'-0"

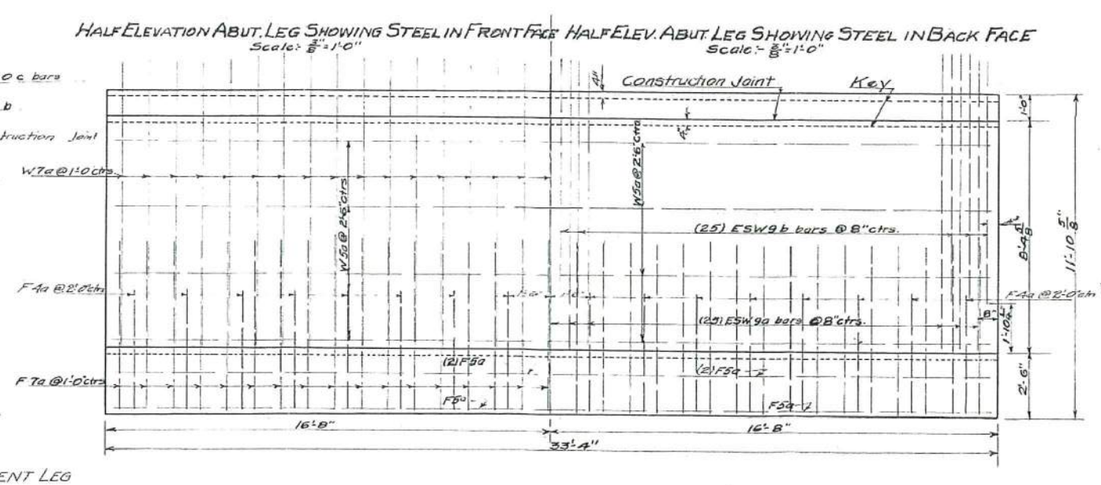

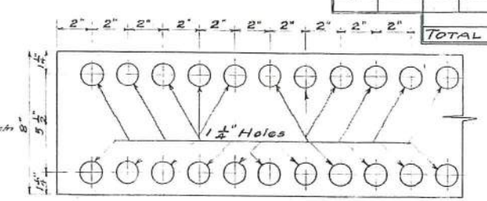

DETAIL OF 8" 24 oz COPPER STRIP
To run across Construction Joint Scale: 3" = 1'

STEEL LIST

Mark	Size	No.	Length	Weight	Shape
FRAME STEEL					
ESW9a	1 ⅛" □	98	41'-11⅞"	17,703	bt
ESW9b	1 ⅛" □	100	28'-10½"	11,562	bt
ES9a	1 ⅛" □	49	33'-0"	7,380	st
S8b	3/4" φ	29	34'-4"	1495	bt
S5a	3/4" φ	29	38'-8½"	1686	bt
S5c	3/4" φ	4	32'-10"	197	st
S4a	5/8" φ	6	26'-2"	164	st
S4b	5/8" φ	4	32'-10"	137	st
S4c	5/8" φ	66	7'-3"	499	bt
150a	1½" □	34	26'-0"	4697	st
150b	1½" □	16	39'-0"	3515	st
150c	1½" □	34	42'-10"	7,737	bt
C4a	5/8" φ	12	28'-9"	360	st
STIRRUPS					
K2a	½" φ	34	4'-9"	108	bt
K2b	½" φ	34	4'-5"	100	bt
K2c	½" φ	34	4'-0"	81	bt
K2d	½" φ	34	3'-9"	85	bt
K2e	½" φ	34	3'-5"	78	bt
K2f	½" φ	34	3'-2"	72	bt
K2g	½" φ	34	3'-0"	68	bt
K2h	½" φ	34	2'-9"	62	bt
K2i	½" φ	34	2'-7"	59	bt
K2j	½" φ	34	2'-6"	57	bt
K2k	½" φ	34	2'-5"	55	bt
K2l	½" φ	34	2'-4"	53	bt
K2m	½" φ	34	2'-3"	51	bt
K2n	½" φ	17	2'-3"	26	bt
ABUTMENT LEGS					
W5a	¾" φ	22	32'-10"	1085	st
W7a	1" φ	66	12'-10"	2261	st
F5a	¾" φ	3	32'-10"	148	st
F7a	1" φ	33	12'-1½"	1245	bt
F4a	⅝" φ	34	6'-9"	239	"
RAILINGS & POSTS					
R2a	½" φ	28	8'-6"	159	bt
R2b	½" φ	56	7'-4"	274	st
R2c	½" φ	4	9'-5"	25	bt
R2d	½" φ	4	9'-0½"	24	bt
R2e	½" φ	4	8'-11½"	24	bt
R2f	½" φ	4	8'-4½"	22	bt
R2g	½" φ	16	8'-0½"	86	bt
R2h	½" φ	32	6'-10½"	147	st
R2c,	½" φ	4	9'-5"	25	bt
R2d,	½" φ	4	9'-0½"	24	bt
D4a	⅝" φ	40	8'-9"	407	bt
D4b	⅝" φ	16	10'-1½"	169	bt
D5a	¾" φ	130	9'-3½"	1214	bt
WINGS					
W4a	⅝" φ	12	14'-0"	175	st.
W4b	⅝" φ	64	14'-0"	935	st
W4c	⅝" φ	12	12'-3"	216	st
W4d	⅝" φ	16	15'-0"	250	st
W4e	⅝" φ	16	2'-0"	33"	st
FW6a	⅞" φ	36	14'-10"	1091	bt
FW6b	⅞" φ	38	11'-4"	880	bt
FW4d	⅝" φ	16	17'-7"	288	st
FW4b	⅝" φ	38	6'-2"	245	bt
P4a	⅝" φ	4	12'-6½"	66	bt
P4b	⅝" φ	4	14'-7"	61	bt
P4c	⅝" φ	4	13'-4"	56	bt
P4d	⅝" φ	4	12'-3½"	51	bt
P4e	⅝" φ	4	11'-2"	47	bt
P4f	⅝" φ	4	10'-0"	42	bt
P4g	⅝" φ	4	8'-10½"	37	bt
P4h	⅝" φ	36	13'-9"	516	st.
FP5a	¾" φ	18	6'-0"	162	bt
			TOTAL	71,226 lb	

BENDING DIAGRAMS

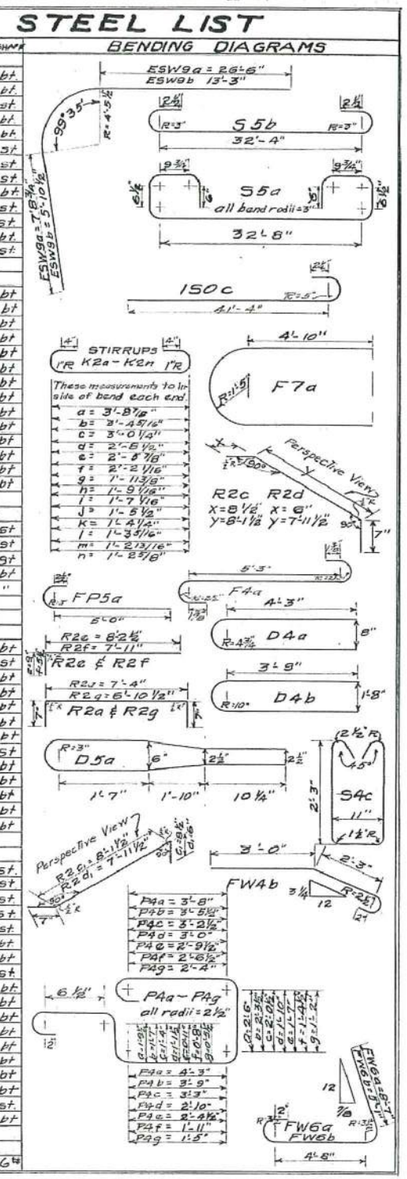

LUCAS COUNTY ENGINEER

BRIDGE NO. 106
SILICA DRIVE OVER TEN MILE CREEK

APPROVED 6/11/37 — COUNTY ENGINEER

DESIGNED	DRAWN	TRACED	CHECKED	REVIEWED
J.H.D	J.H.D	GEN	M.H.R	M.H.R

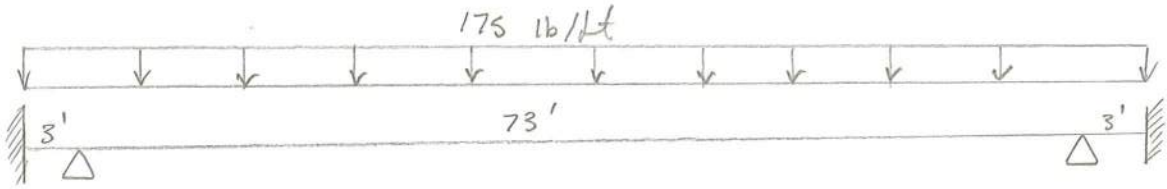

Diagram 1

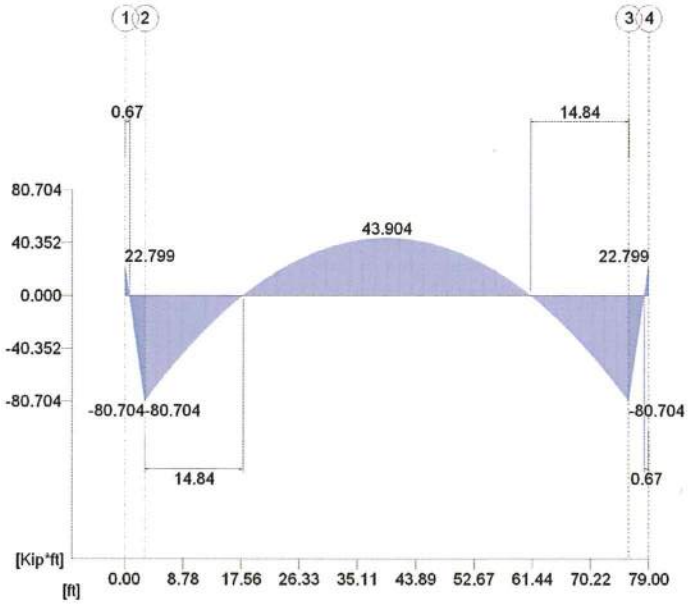

Diagram 2

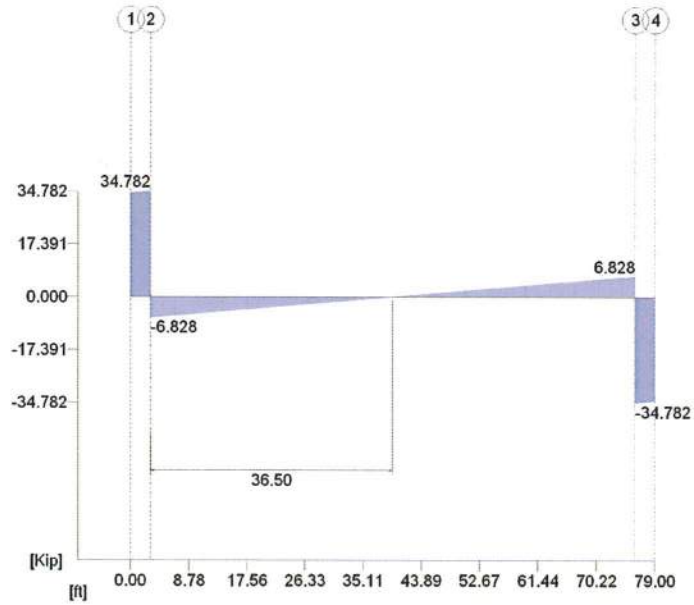

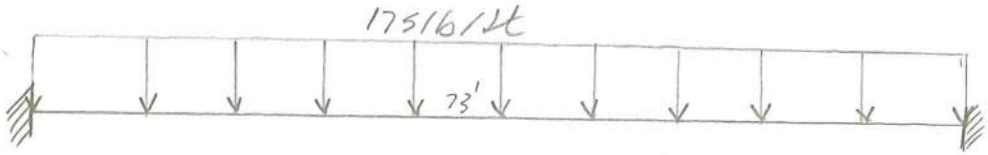

Diagram 1

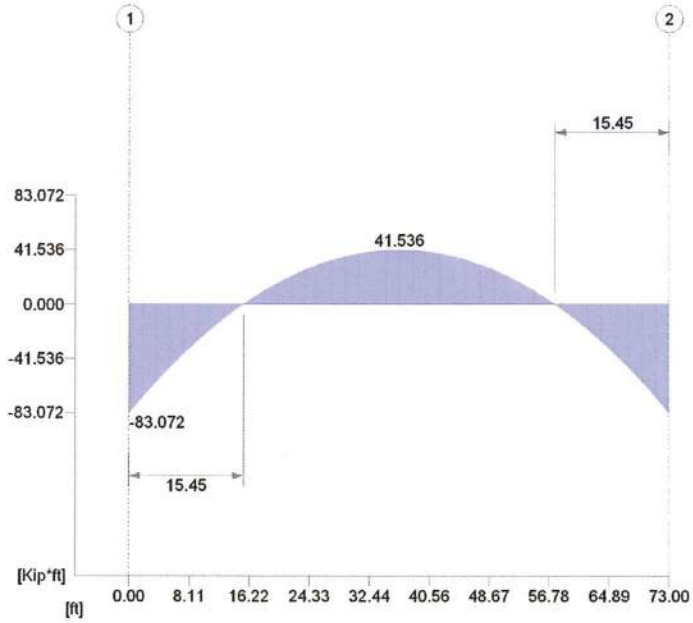

Diagram 2

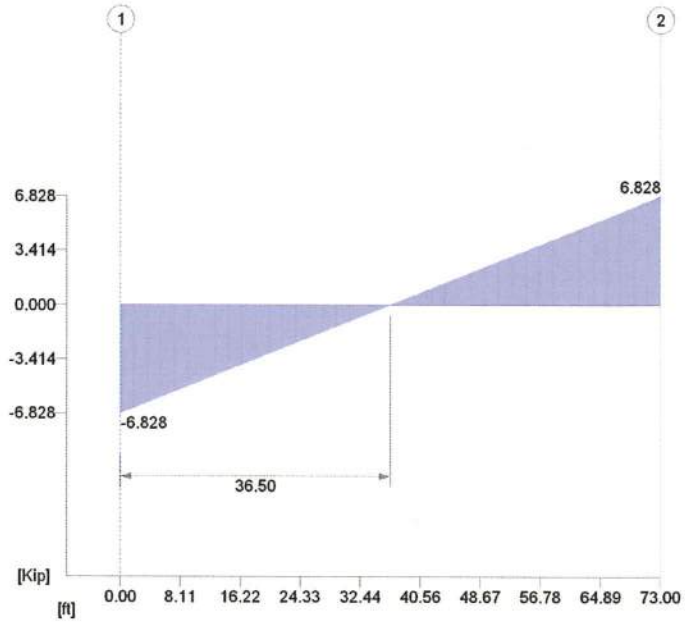

SHEET NO.: 8 OF

DESIGN BY: DATE: CHECKED BY: DATE:

SUBJECT:

REFERENCE: NOTE FILE: COMM. NO.:

DGL CONSULTING ENGINEERS

Total Dead Loads = 2(176 + 291 + ~~1885~~ 1675) lb/ft = ~~4709~~ 4284 lb/ft

Bridge Width = 2' + 2' + 29.5' = 33.5'

Distributed Load = ~~4709~~ 4284 / 33.5' = ~~140.4~~ 128 lb/ft

Section Range & Specifications

Span	Range No. (Length)	Slab Min. Thickness (Approximate)	Top Reinforcing steel $d_b = 2.5625$	Bot Reinforcing steel d_b = Varies
1	1 (3'-0")	3.67' (44")	1.125□ @ 4" c/c As = 3.797 in²/ft	1.25□ @ 24" c/c As = 0.781 in²/ft db = 41.375"
2	1 (1'-6")	44"	1.125□ @ 4" c/c As = 3.797 in²/ft	1.25□ @ 24" c/c As = 0.781 in²/ft db = 41.375"
2	2 (13'-3")	35"	1.125□ @ 4" c/c As = 3.797 in²/ft	1.25□ @ 24" c/c As = 0.781 in²/ft db = 32.375"
2	3 (2'-3")	33"	1.125□ @ 8" c/c As = 1.898 in²/ft	1.25□ @ 24" c/c As = 0.781 in²/ft db = 30.375"
2	4 (2'-0")	32"	1.125□ @ 8" c/c As = 1.898 in²/ft	1.25□ @ 12" c/c As = 1.563 in²/ft db = 29.375
2	5 (4'-6")	29"	(2) 1.125□ @ 8" c/c As = 3.797 in²/ft	1.25□ @ 12" c/c As = 1.563 in²/ft db = 26.375"
2	6 (4'-6")	26"	(2) 1.125□ @ 8" c/c As = 3.797 in²/ft	1.25□ @ 6" c/c As = 3.125 in²/ft db = 23.375"
2	7 (8'-6")	21"	1.125□ @ 8" c/c As = 1.898 in²/ft	1.25□ @ 6" c/c As = 3.125 in²/ft db = 18.375"

Symetrical about ℄

Add additional D.L. for concrete slab this is not accounted for as part of the structural Element.

SEE SPREADSHEET (SH1, 9a)

SHEET NO.: 9 OF

DESIGN BY: DATE: CHECKED BY: DATE:

SUBJECT:

REFERENCE: NOTE FILE: COMM. NO.:

DGL CONSULTING ENGINEERS

Additional Concrete D.L. (That is not part of the structural Element 501)

Range 2 => $\left[\left(\frac{44+35}{2\times12}\right)' - \frac{35'}{12}\right] \times 13.25' \times 1' \times 150\,lb/ft^3 \times 2 = 1491\,lb$

Range 3 => $\left[\left(\frac{35+33}{2\times12}\right) - \frac{33'}{12}\right] \times 2.25' \times 1' \times 150\,lb/ft^3 \times 2 = 57\,lb$

Range 4 => $\left[\left(\frac{33+32}{2\times12}\right) - \frac{32'}{12}\right] \times 2' \times 1' \times 150\,lb/ft^3 \times 2 = 25\,lb$

Range 5 => $\left[\left(\frac{32+29}{2\times12}\right) - \frac{29}{12}\right] \times 4.5' \times 1' \times 150\,lb/ft^3 \times 2 = 169\,lb$

Range 6 => $\left[\left(\frac{29+26}{2\times12}\right) - \frac{26}{12}\right] \times 4.5' \times 1' \times 150\,lb/ft^3 \times 2 = 169\,lb$

Range 7 => $\left[\left(\frac{26+21}{2\times12}\right) - \frac{21}{12}\right] \times 8.5' \times 1' \times 150\,lb/ft^3 \times 2 = 532\,lb$

2443 lb

SEE SPREADSHEET (SHT. 9G)

~~Assume evenly Distributed = 2443 lb / 79' = 31 lb/ft~~

Total Distributed ~~140.40~~ 128 lb/ft + ~~31~~ 22 lb/ft = ~~171.40~~ 150 lb/ft

USE ~~175~~ 150 lb/ft

Slab Section Ranges and Specifications

SFN-4862473 (Silica Dr. over 10 mile Cr.)

						Top Reinforcing				Bottom Reinforcing			
Range	Slab Thickness (in.)	Distance (ft.)	Extra D.L. (Total)	Extra D.L. (/ft.)	Design Slab Thickness (in.)	Bar Size (Square)	Spacing (in.)	A_s (in^2/ft.)	d_t (in.)	Bar Size (Square)	Spacing (in.)	A_s (in^2/ft.)	d_b (in.)
1		4.5			68.00	1.125	4	3.80	2.56	1.25	24	0.78	65.38
	68												
2		5	664	132.8	46.75	1.125	4	3.80	2.56	1.25	24	0.78	44.13
	46.75												
3		4	163	40.6	40.25	1.125	4	3.80	2.56	1.25	24	0.78	37.63
	40.25												
4		4.25	163	38.3	34.13	1.125	4	3.80	2.56	1.25	24	0.78	31.50
	34.125												
5		2.25	32	14.1	31.88	1.125	8	1.90	2.56	1.25	24	0.78	29.25
	31.875												
6		2	27	13.3	29.75	1.125	8	1.90	2.56	1.25	12	1.56	27.13
	29.75												
7		4.5	109	24.2	25.88	1.125	8	1.90	2.56	1.25	12	1.56	23.25
	25.875												
8		4.5	77	17.2	23.13	1.125	8	1.90	2.56	1.25	6	3.13	20.50
	23.125												
9		4.5	46	10.2	21.50	1.125	8	1.90	2.56	1.25	6	3.13	18.88
	21.5												
10		4	13	3.1	21.00	1.125	8	1.90	2.56	1.25	6	3.13	18.38
	21												
Totals		35	1292	36.9									

USE 22#/FT SINCE MOST OF IT IS NEAR FIXED END

9a

BR-100
Load Rating Summary

BRIDGE LOAD RATING SUMMARY REPORT
OFFICE OF STRUCTURAL ENGINEERING
OHIO DEPARTMENT OF TRANSPORTATION

SFN	BRIDGE NUMBER	DISTRICT
4862473	LUC-MILIC-0106	2

ORIGINAL CONSTRUCTION YEAR	REHABILITATION YEAR	OVERALL STRUCTURE LENGTH	FEATURE INTERSECTION
1938	N/A	70' f/f ABUTMENTS	SILICA DRIVE OVER TEN MILE CREEK

SPECIAL ASSUMPTIONS & COMMENTS	LOAD RATING OF EXISTING SINGLE SPAN (70' FACE/FACE ABUTMENTS) REINFORCED CONCRETE RIGID FRAME STRUCTURE

	PLEASE SELECT ON RIGHT, WHERE APPROPRIATE, BY USING THE DROP DOWN ARROW BUTTON
LOAD RATING PURPOSE:	8 - Update Analysis Model and Software
LOAD RATING SOFTWARE:	3 - BrR
RATING SOURCE:	1 - Plan information available for load rating analysis (Default)
RATING METHOD:	2 - Load Factor Rating (LFR)
ORIGINAL DESIGN LOADING:	6 - HS20-44 & Alternate Military Loading

STRUCTURE RATING SUMMARY

OHIO LEGAL

Loading Type	GVW (Tons)	Rating Factor - RF Inv.	Rating Factor - RF Oper.	Legal Weight (Tons)
HS20 Loading	36	0.609	1.018	36.00
Ohio - 2F1	15		2.162	15.00
Ohio - 3F1	23		1.438	23.00
Ohio - 4F1	27		1.250	27.00
Ohio - 5C1	40		1.392	40.00

SPECIALIZED HAULING VEHICLES (SHV)

Loading Type	GVW (Tons)	Rating Factor-RF Oper.	Legal Weight (Tons)
NOTIONAL RATING LOAD	40	0.888	35.52
SU4	27	1.257	27.00
SU5	31	1.127	31.00
SU6	34.75	1.017	34.75
SU7	38.75	0.932	36.12

Overall Posting Rating
95%
BRIDGE POSTING REQUIRED BY RATING
LOAD POSTING IS RECOMMENDED

Sign Posting Recommendation:

WEIGHT LIMIT	
AXLES	
2	15 T
3	23 T
4	27 T
5	31 T
6+	35 T

AGENCY/FIRM	DGL CONSULTING ENGINEERS, LLC	REPORT DATE:	

RATED BY	PE #	PHONE NUMBER	EMAIL
KYLE W. LAYTON		419-535-1015 x240	KLAYTON@DGL-LTD.COM
REVIEWED BY	**PE #**	**PHONE NUMBER**	**EMAIL**
NICHOLAS B. LAKE P.E.	75628	419-535-1015 x220	NLAKE@DGL-LTD.COM

SFN: 4862473 BRIDGE NUMBER: LUC-MILIC-0106

BR-100_SMS (02/2016)

Bridge Inspection Report

Part of Appendix E (See Appendix G for latest report)

STATE OF OHIO DEPARTMENT OF TRANSPORTATION
BRIDGE INSPECTION FIELD REPORT

Structure File Number: 4862473 Inventory Bridge Number: LUC MILIC 01.060 N Bridge Type: 1 - CONCRETE/5 - ARCH/3 - DECK

Sufficiency Rating: 55.6 Date Built: 7/1/1938

District: 02 Place Code (FIPS): SYLVANIA SILICA DRIVE over TENMILE CREEK 0106 Type of Service on: HIGHWAY

APPROACH ITEMS

	QTY.	1	2	3	4	TR
c1. Approach Wearing Surface (EA)	2					1
c2. Approach Slabs (SF)	1080					1
c3. Relief Joint (LF)	60					
c4. Embankment (EA) d	4					1
c5. Guardrail (EA)	0.0					1
N36. Safety Features: Tr, Gr, Tm	36)B 0	36)C 0	36)D 1			
c6. Approach Summary					(9-0)	7

DECK ITEMS

	QTY.	1	2	3	4	TR
c7.1 Floor/Slab (SF)	2579.5					2
c7.2 Edge of Floor/Slab (LF)	154					
c8. Wearing Surface (SF)	2271.5					2
c9. Curb/Sidewalk/Walkway (LF)	154.0					2
c10. Median (LF)						
c11. Railing (LF)	154					1
N36. Safety Features: Rail	36)A 0					
c12. Drainage (EA) d	0.0					1
c13. Expansion Joint (LF) d	0.0					
N58. Deck Summary					(9-0)	5

SUPERSTRUCTURE ITEMS

	QTY.	1	2	3	4	TR
c14. Alignment (EA) d	1					1
c15.1 Beams/Girders (LF)	0.0					2
c15.2 Slab (SF)	2583					
c16. Diaphragm/X-Frames (EA)						
c17. Stringers (LF)	0.0					
c18. Floorbeams (LF)	0.0					
c19. Truss Verticals (EA)						
c20. Truss Diagonals (EA)						
c21. Truss Upper Chord (EA)						
c22. Truss Lower Chord (EA)						
c23. Truss Gusset Plate (EA) d						
c24. Lateral Bracing (EA)						
c25. Sway Bracing (EA)						
c26. Bearing Devices (EA) d						
c27. Arch (LF)	0.0					2
c28. Arch Column/Hanger (EA)	0.0					
c29. Arch Spandrel Walls (LF)						
c30. Prot. Coating System (LF) d						
c31. Pins/Hangers/Hinges (EA) d						
c32. Fatigue (LF) d						
N59. Superstructure Summary					(9-0)	5

SUBSTRUCTURE ITEMS

	QTY.	1	2	3	4	TR
c33. Abutment Walls (LF)	67.0					2
c34. Abutment Caps (LF)	67.0					
c35. Abut. Columns/Bents (EA)	0.0					
c36. Pier Walls (LF)						
c37. Pier Caps (LF)						
c38. Pier Columns/Bents (EA)						
c39. Backwalls (LF)						
c40. Wingwalls (EA)	0.0					2
c42. Scour (EA) d	2					1
c43. Slope Protection (EA) d						
N60. Substructure Summary					(9-0)	6

CULVERT ITEMS

	QTY.	1	2	3	4	TR
c44. General (LF)						
c45. Alignment (LF) d						
c46. Shape (LF) d						
c47. Seams (LF) d						
c48. Headwall/Endwall (LF)						
c49. Scour (LF) d						
c50. Abutments (LF)						
N62. Culvert Summary					(9-0)	N

CHANNEL ITEMS

	QTY.	1	2	3	4	TR
c51. Alignment (LF) d	200.0					1
c52. Protection (LF) d						
c53. Hydraulic Opening (EA) d	1					1
c54. Navigation Lights (EA) d						
N61. Channel Summary					(9-0)	8

SIGN/UTILITY ITEMS

	QTY.	1	2	3	4	TR
c55. Signs (EA) d						1
c56. Sign Supports (EA) d						
c57. Utilities (LF) d						
General Appraisal					(9-0)	5
N41. Operating Status						A

Inspector Name	Lake, Nicholas	
Inspection Date/Type	09/16/2015	Routine
PE Number	075628	
Reviewer Name	Hamid, Ahmed	
Review Date	12/08/2015	
PE Number	067062	

STATE OF OHIO DEPARTMENT OF TRANSPORTATION
BRIDGE INSPECTION FIELD REPORT

Structure File Number: 4862473 Inventory Bridge Number: LUC MILIC 01.060 N Bridge Type: 1 - CONCRETE/5 - ARCH/3 - DECK

Sufficiency Rating: 55.6 Date Built: 7/1/1938

District: 02 Place Code (FIPS): SYLVANIA SILICA DRIVE over TENMILE CREEK 0106 Type of Service on: HIGHWAY

Key: "Qty" = Quantity for Element Level inspection; "(LF)" = Linear Feet; "(SF)" = Square Feet; "(EA)" = Each or count; "CR" = 1-4 Condition Rating or average of worst span unless Summary item 9-0, then the average of entire bridge influenced by the bold boxes; "TR" = Transition Rating or weighted average of condition states; "d" = dedicated or specific chart and guidance, all others use Material specific chart/guidance; "c" = condition prefix; "N" = NBIS rating

Inspection Procedures

Part of Appendix E (See Appendix G for latest report)

Comments

APPROACH

c1. Approach Wearing Surface

Cracks and asphalt patching on the south approach.

DECK

c8. Wearing Surface

South edge of deck in South travel lane has broken up near expansion joint.

c9. Curb/Sidewalk/Walkway

West curb over midspan has been patched. Also, part of the east curb has been patched near the FA. there is an adjacent pedestrian bridge to the west of this bridge.

c11. Railing

Multiple areas of patching and minor areas of concrete spalling at all end posts top corners.

c12. Drainage

Water was observed to pond along both curblines (2014).

SUPERSTRUCTURE

c15.1 Beams/Girders

Concrete void near mid-span approximately 10 inches wide by 2 inches long. There is an area of spalled concrete near mid-span sounds hollow approximately 6 feet long by 1 foot wide. There is another area of spalling concrete hollow approximately 2 feet long by 1 foot wide near the voided concrete area. Near the east edge of deck there is heavy map cracking with observed water leakage through the concrete near the scupper. There is heavy map cracking along mid span, looks wet in this area.

c27. Arch

There is heavy cracking along the northwest edge of arch on the fascia down to abutment. There are multiple cracks with EF along the west and east face.

SUBSTRUCTURE

c33. Abutment Walls

Cracks throughout each abutment. The northwest corner on the forward abutment has one foot vertical concrete spalling.

c40. Wingwalls

South west wing wall has cracks and EF.

Part of Appendix E (See Appendix G for latest report)

CHANNEL

c51. Alignment

Alignment appears good.

c53. Hydraulic Opening

Small rocks along channel bottom, hydraulic opening good.

BrR Output Summary

Bridge Name: Imported Bridge
NBI Structure ID: 4862473
Bridge ID: Silica Dr over Ten Mile Creek

Analyzed By: BrR
Analyze Date: Monday, May 09, 2016 11:08:38
Analysis Engine: AASHTO LFR Engine Version 6.7.0.3001
Analysis Preference Setting: None

Report By: BrR
Report Date: Monday, May 09, 2016 11:09:34

Structure Definition Name: Girder 1
Member Name: S01
Member Alternative Name: Mbr Alt 1

Load Factor Rating Summary

Live Load		Rating Factor	Controls	Capacity (Ton)	Span	Location (ft)	Percent	Impact	Lane
HS 20-44	Inventory	0.609	Design Flexure - Concrete	21.94	2	1.50	2.1	As Requested	As Requested
HS 20-44	Operating	1.018	Design Flexure - Concrete	36.64	2	1.50	2.1	As Requested	As Requested
NRL	Operating	0.888	Design Flexure - Concrete	35.52	2	1.50	2.1	As Requested	As Requested
SU4	Operating	1.257	Design Flexure - Concrete	33.95	2	1.50	2.1	As Requested	As Requested
SU5	Operating	1.127	Design Flexure - Concrete	34.94	2	1.50	2.1	As Requested	As Requested
SU6	Operating	1.017	Design Flexure - Concrete	35.34	2	1.50	2.1	As Requested	As Requested
SU7	Operating	0.932	Design Flexure - Concrete	36.12	2	1.50	2.1	As Requested	As Requested
2F1	Operating	2.162	Design Flexure - Concrete	32.44	2	1.50	2.1	As Requested	As Requested
3F1	Operating	1.438	Design Flexure - Concrete	33.06	2	1.50	2.1	As Requested	As Requested
4F1	Operating	1.250	Design Flexure - Concrete	33.75	2	1.50	2.1	As Requested	As Requested
5C1	Operating	1.392	Design Flexure - Concrete	55.69	2	1.50	2.1	As Requested	As Requested

Note:
"N/A" indicates not applicable
"**" indicates not available

Appendix F:
Portions of FEMA Flood Insurance Study

FLOOD INSURANCE STUDY

VOLUME 1 OF 4

LUCAS COUNTY, OHIO

AND INCORPORATED AREAS

Community Name	Community Number
Berkey, Village of	390901
Harbor View, Village of	390702
Holland, Village of	390659
Lucas County (Unincorporated Areas)	390359
Maumee, City of	390360
Oregon, City of	390361
Ottawa Hills, Village of	390362
Swanton, Village of (Fulton & Lucas Counties)	360632
Sylvania, City of	390364
Toledo, City of	395373
Waterville, Village of	390637
Whitehouse, Village of	390639

REVISED:
August 16, 2011

Federal Emergency Management Agency

FLOOD INSURANCE STUDY NUMBER
39095CV001A

AREA OF MINIMAL FLOOD HAZARD
Zone X
Sylvania
Monroe St
Maplewood Ave
Roosevelt Dr
Lane St
Parkwood Blvd
Fairview Dr
Apple Creek Rd
Bent Oak Rd
Hickory Ridge
Northview High School
FLOODWAY
Zone AE
TEN MILE CREEK
Main St
Zone A
Lourdes College
Harroun Community Park
LUCAS COUNTY

FLOODING SOURCE		FLOODWAY			1-PERCENT-ANNUAL-CHANCE FLOOD WATER SURFACE ELEVATION (FEET NAVD)			
CROSS SECTION	DISTANCE[1]	WIDTH (FEET)	SECTION AREA (SQUARE FEET)	MEAN VELOCITY (FEET PER SECOND)	REGULATORY	WITHOUT FLOODWAY	WITH FLOODWAY	INCREASE
TENMILE CREEK								
A	19.98	190	690	6.4	626.6	626.6	627.4	0.8
B	20.08	165	870	5.1	629.3	629.3	630.1	0.8
C	20.12	70	430	10.4	630.0	630.0	630.4	0.4
D	20.14	70	410	10.8	630.0	630.0	630.4	0.4
E	20.15	70	470	9.4	631.2	631.2	631.2	0.0
F	20.21	70	480	9.2	632.5	632.5	632.5	0.0
G	20.26	55	320	13.8	632.5	632.5	632.7	0.2
H	20.28	325	2,130	2.1	636.6	636.6	636.6	0.0
I	20.32	285	1,680	2.6	636.7	636.7	636.7	0.0
J	20.42	85	710	6.2	637.0	637.0	637.1	0.1
K	20.44	75	560	8.0	637.2	637.2	637.3	0.1
L	20.46	235	1,480	3.0	638.5	638.5	638.5	0.0
M	20.58	120	780	5.7	638.6	638.6	638.8	0.2
N	20.74	230	1,300	3.4	640.9	640.9	641.2	0.3
O	20.93	140	680	6.5	642.7	642.7	643.0	0.3
P	21.01	110	650	6.9	644.1	644.1	644.2	0.1
Q	21.02	110	660	6.7	644.1	644.1	644.2	0.1
R	21.04	145	890	5.0	644.8	644.8	644.8	0.0
S	21.16	175	1,120	4.0	645.6	645.6	645.7	0.1
T	21.23	125	840	5.3	645.9	645.9	646.1	0.2
U	21.26	150	1,190	3.7	648.4	648.4	648.6	0.2
V	21.51	135	1,070	4.2	649.2	649.2	649.6	0.4
W	21.68	310	1,620	2.7	649.7	649.7	650.3	0.6
X	21.79	115	810	5.5	650.4	650.4	651.0	0.6
Y	21.83	110	810	5.5	650.7	650.7	651.5	0.8

[1] Miles above mouth of Ottawa River at Maumee Bay

SEE PAGE 340 FOR PROFILE DATA

TABLE 14

FEDERAL EMERGENCY MANAGEMENT AGENCY

LUCAS COUNTY, OHIO
AND INCORPORATED AREAS

FLOODWAY DATA

TENMILE CREEK

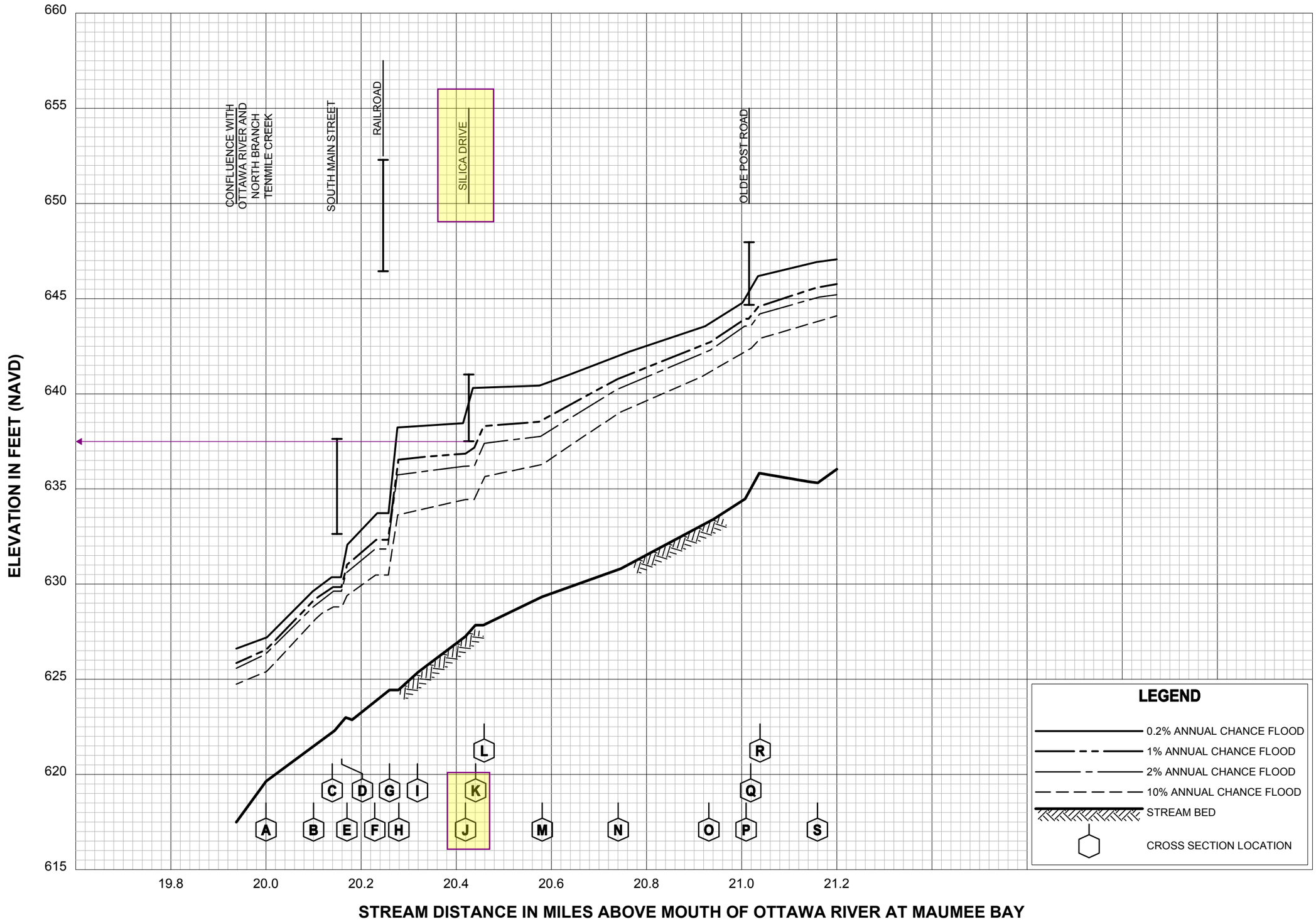

FLOOD PROFILES

TENMILE CREEK

FEDERAL EMERGENCY MANAGEMENT AGENCY

LUCAS COUNTY, OH

AND INCORPORATED AREAS

160P

SEE PAGE 148 FOR
CROSS SECTION DATA

Appendix G:
2018 Bridge Inspection Report

STATE OF OHIO DEPARTMENT OF TRANSPORTATION
BRIDGE INSPECTION FIELD REPORT

Structure File Number: 4862473 Inventory Bridge Number: LUC MILIC 01.060 Bridge Type: 1 - CONCRETE/5 - ARCH/3 - DECK

Sufficiency Rating: 51.0 Date Built: 7/1/1938

District: 02 Place Code (FIPS): SYLVANIA SILICA DRIVE over TENMILE CREEK 0106 Type of Service on: HIGHWAY

APPROACH ITEMS

	QTY.	1	2	3	4	TR
c1. Approach Wearing Surface (EA)	2					1
c2. Approach Slabs (SF)	1080					1
c3. Relief Joint (LF)	60					
c4. Embankment (EA) d	4					1
c5. Guardrail (EA)	0.0					1
N36. Safety Features: Tr, Gr, Tm	36)B 0	36)C 0	36)D 1			
c6. Approach Summary					(9-0)	7

DECK ITEMS

	QTY.	1	2	3	4	TR
c7.1 Floor/Slab (SF)	2579.5					2
c7.2 Edge of Floor/Slab (LF)	154					
c8. Wearing Surface (SF)	2271.5					2
c9. Curb/Sidewalk/Walkway (LF)	154.0					2
c10. Median (LF)	77					
c11. Railing (LF)	154					1
N36. Safety Features: Rail	36)A 0					
c12. Drainage (EA) d	0.0					1
c13. Expansion Joint (LF) d	0.0					
N58. Deck Summary					(9-0)	5

SUPERSTRUCTURE ITEMS

	QTY.	1	2	3	4	TR
c14. Alignment (EA) d	1					1
c15.1 Beams/Girders (LF)	0.0					2
c15.2 Slab (SF)	2583					
c16. Diaphragm/X-Frames (EA)						
c17. Stringers (LF)	0.0					
c18. Floorbeams (LF)	0.0					
c19. Truss Verticals (EA)						
c20. Truss Diagonals (EA)						
c21. Truss Upper Chord (EA)						
c22. Truss Lower Chord (EA)						
c23. Truss Gusset Plate (EA) d						
c24. Lateral Bracing (EA)						
c25. Sway Bracing (EA)						
c26. Bearing Devices (EA) d						
c27. Arch (LF)	0.0					3
c28. Arch Column/Hanger (EA)	0.0					
c29. Arch Spandrel Walls (LF)						
c30. Prot. Coating System (LF) d						
c31. Pins/Hangers/Hinges (EA) d						
c32. Fatigue (LF) d						
N59. Superstructure Summary					(9-0)	4

SUBSTRUCTURE ITEMS

	QTY.	1	2	3	4	TR
c33. Abutment Walls (LF)	67.0					2
c34. Abutment Caps (LF)	67.0					
c35. Abut. Columns/Bents (EA)	0.0					
c36. Pier Walls (LF)						
c37. Pier Caps (LF)						
c38. Pier Columns/Bents (EA)						
c39. Backwalls (LF)						
c40. Wingwalls (EA)	0.0					2
c42. Scour (EA) d	2					1
c43. Slope Protection (EA) d						
N60. Substructure Summary					(9-0)	6

CULVERT ITEMS

	QTY.	1	2	3	4	TR
c44. General (LF)						
c45. Alignment (LF) d						
c46. Shape (LF) d						
c47. Seams (LF) d						
c48. Headwall/Endwall (LF)						
c49. Scour (LF) d						
c50. Abutments (LF)						
N62. Culvert Summary					(9-0)	N

CHANNEL ITEMS

	QTY.	1	2	3	4	TR
c51. Alignment (LF) d	200.0					1
c52. Protection (LF) d						
c53. Hydraulic Opening (EA) d	1					1
c54. Navigation Lights (EA) d						
N61. Channel Summary					(9-0)	8

SIGN/UTILITY ITEMS

	QTY.	1	2	3	4	TR
c55. Signs (EA) d						1
c56. Sign Supports (EA) d						
c57. Utilities (LF) d						
General Appraisal					(9-0)	4
N41. Operating Status						P

Inspector Name	Lake, Nicholas	
Inspection Date/Type	10/23/2018	Routine
PE Number	075628	
Reviewer Name	Hamid, Ahmed	
Review Date	10/29/2018	
PE Number	067062	

STATE OF OHIO DEPARTMENT OF TRANSPORTATION
BRIDGE INSPECTION FIELD REPORT

Structure File Number: 4862473 Inventory Bridge Number: LUC MILIC 01.060 Bridge Type: 1 - CONCRETE/5 - ARCH/3 - DECK

Sufficiency Rating: 51.0 Date Built: 7/1/1938

District: 02 Place Code (FIPS): SYLVANIA SILICA DRIVE over TENMILE CREEK 0106 Type of Service on: HIGHWAY

Key: "Qty" = Quantity for Element Level inspection; "(LF)" = Linear Feet; "(SF)" = Square Feet; "(EA)" = Each or count; "CR" = 1-4 Condition Rating or average of worst span unless Summary item 9-0, then the average of entire bridge influenced by the bold boxes; "TR" = Transition Rating or weighted average of condition states; "d" = dedicated or specific chart and guidance, all others use Material specific chart/guidance; "c" = condition prefix; "N" = NBIS rating

Inspection Procedures

Comments

APPROACH

c1. Approach Wearing Surface

Cracks and asphalt patching on the south approach.

DECK

c9. Curb/Sidewalk/Walkway

West curb over midspan has been patched but is broken up already. Also, part of the east curb has been patched near the FA. there is an adjacent pedestrian bridge to the west of this bridge.

c11. Railing

Multiple areas of patching and minor areas of concrete spalling at all end posts top corners.

c12. Drainage

Water was observed to pond along both curblines (2014).

SUPERSTRUCTURE

c27. Arch

There are multiple areas of spalled concrete along the underside of the main arch. There is a 1 foot by 6 foot spall near mid-span that has broken off to expose 3 longitudinal steel nars with up to 20% section loss. There is a another spall just each still at mid-span that is 3 feet by 4 feet with 3 exposed longitudinal steel bars with up to 20% section loss. There is a 1 foot by 6 foot spall near the rear abutment that hasn't fallen yet. The middle on the mid-span appears to be hollow/delaminated (8 foot x 8 foot). Around fhe SW scupper is a 2 foot by 3 foot by 3 inch deep spall. Around the NE scupper is a 2 foot by 4 foot by 4 inch deep spall. The underside near both deck edges (majority of 6 feet wide) is map cracked and looks damp.

Spandrel Walls: There is heavy cracking along the northwest edge of arch on the fascia down to abutment. There are multiple cracks with EF along the west and east face.

SUBSTRUCTURE

c33. Abutment Walls

Cracks throughout each abutment. The northwest corner on the forward abutment has one foot vertical concrete spalling.

c40. Wingwalls

South west wing wall has cracks and EF.

CHANNEL

c51. Alignment

Alignment appears good.

c53. Hydraulic Opening

Small rocks along channel bottom, hydraulic opening is good.